Eaton – convincing in terms of safety, performance and operational availability.

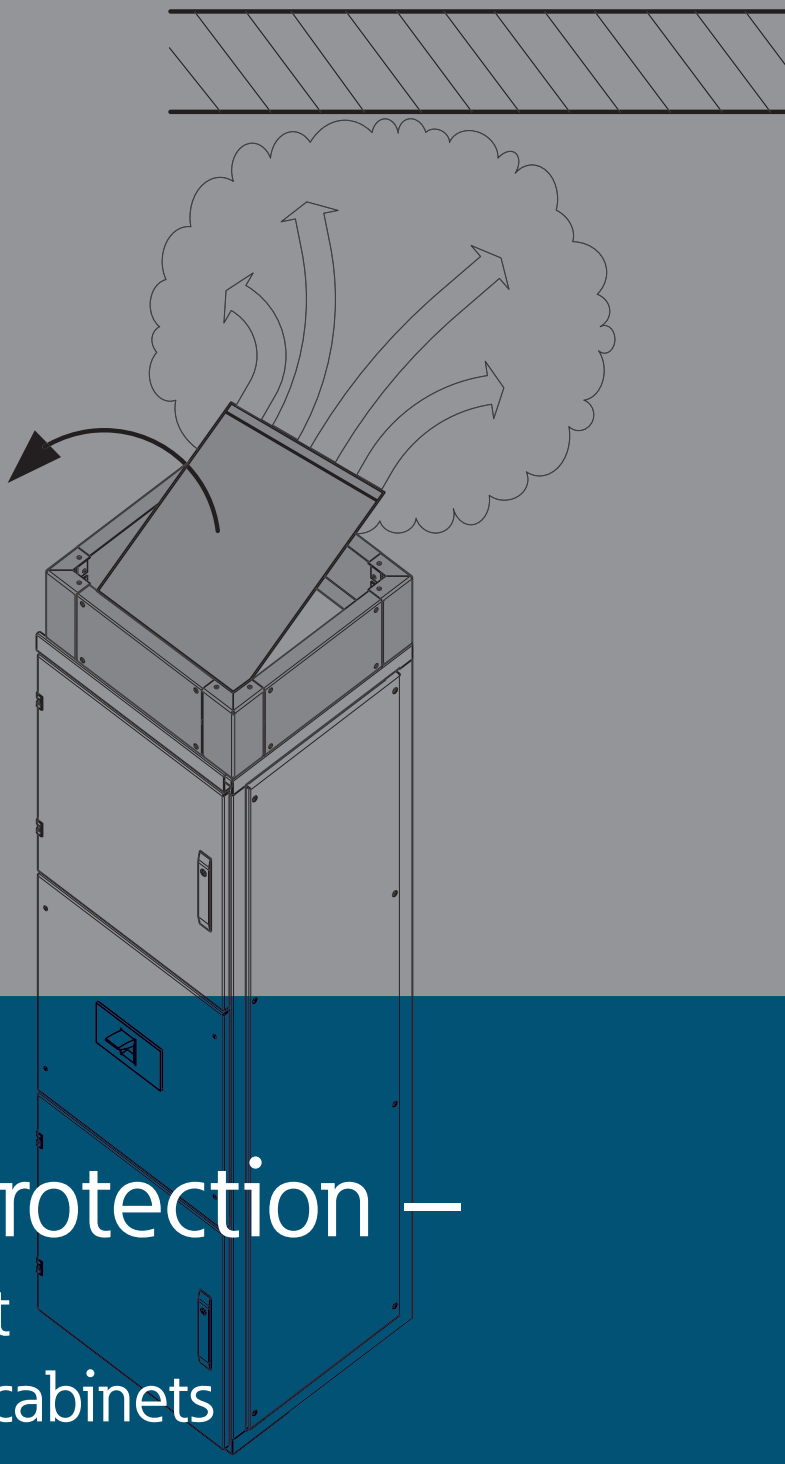

Passive arc protection –

Safety Management for xEnergy control cabinets

Powering Business Worldwide

Switching to safety.

Short circuits in electrical systems can develop a huge destructive impact and endanger human life. This applies in particular to short circuits which cause an arc.

Electric fault arcs produce a faulty connection between system parts with different potentials. In doing so, enormous amounts of energy are released into the environment, primarily as heat and radiation energy of very high intensity. To effectively prevent personal and material damage in the event of a short circuit, Eaton has developed a comprehensive package for passive arc protection in xEnergy control cabinets.

Technical data xEnergy control cabinets
Tested according to IEC/TR 61641

Rated frequency		50/60Hz
Permitted unaffected current under arc conditions	I_{parc}	65kA
Permitted arc burning time	t_{arc}	300ms
Nominal voltage	U_e	415V
Rated insulation voltage	U_i	1000V
Contamination level		3
Protection type		IP40
Internal separation		Form 4

Building construction requirements
The concept of personal protection in control cabinets is based on the fact that the pressure generated by hot gases, which are formed during an arc in the control cabinet, can escape upwards from the enclosure. Therefore, it is imperative to pay attention that sufficient ceiling height and/or other building-related superstructures are available above the control cabinet to ensure a complete opening of the pressure relief valves.

The minimum distance from the upper edge of the cabinet to the ceiling (deepest building element) must be free to at least the same extent as the cabinet depth.

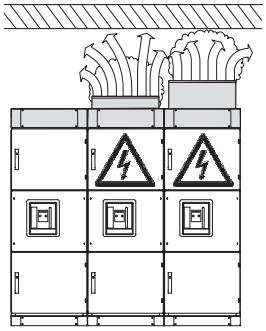

Special attention must be paid so as to ensure that sufficient distance between the control cabinet and the ceiling, or possible beams and other installations, is available so that relief valves can be opened completely (at least cabinet depth).

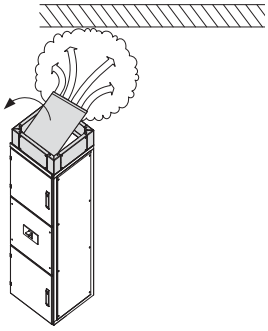

Released hot gases need to escape barrier-free

Personal protection

To ensure personal protection, criteria 1-5 must be fulfilled.

Criterion 1:

a) Ventilation systems:
No ventilation systems in doors, back walls or front, floor and roof plates – so hot gases can be directed specifically to the roof sheet.

No ventilation possible

All planking must be without ventilation systems

b) Arc relief valve:
A special roof plate with relief valve through which hot gases can escape (the roof plate is mounted on the front side with hinges and at the rear with plastic screws which tear off in case of high pressure).

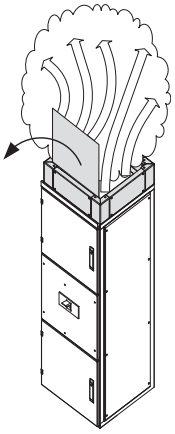

c) Properly secured doors – catch hooks:
Version-1 locking hooks must be replaced with reinforced version-3 ones (enclosed as accessories to the arc relief valve). Version-2 locking hooks may be used.


Version 1


Version 2


Version 3

d) Internal penetration seals:
Main busbar penetration seals over the entire field width (XPFCB...) must be replaced with arc-suitable penetration seals (XPFCBA...).

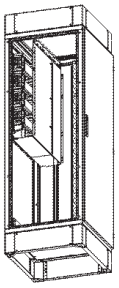
XPFCBA

Criterion 2: No unfolding or flying away parts

Base stand:
The 200mm base stand mounted on the roof of the cabinet ensures that the arc relief valve is not opened more than 90°.

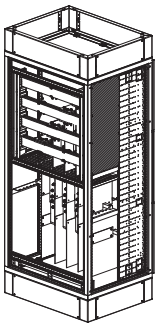

Criterion 4: No ignition of the vertically mounted indicators.

Criteria 1a (no ventilation systems), 1c (reinforced catch hooks in doors) and 2 (stand base) guarantee that vertically mounted indicators are not ignited by escaping gases during the test.

Criterion 3: No holes in the wrapping by arcing (burn out)

An insulating arc barrier between the main busbar and the side wall prevents a flashover of the arc on the side wall.

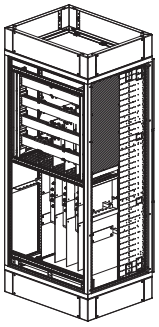
XBI-P

Criterion 5:

The protection circuit for the wrapping accessible parts is still in working order.

System protection

To ensure system protection, criteria 1-5, and additionally criterion 6, must be fulfilled.

Criterion 6:

An additional penetration seal (XPBSS-5) in combination with the field-to-field penetration seal (XPSS2006 or 2008) ensures that the arc is limited to a defined area of the switchgear assembly.

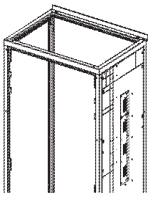
XPSS2006 or 2008
XPBSS-5

Arc-free zone:
This is the part of an electrical circuit within the switchgear assembly in which it is not possible to apply an ignition wire without damaging the insulating materials of the conductors. Arc-free zones are limited to XP fields in our system. In order to design these fields as arc-free, insulating plates (XPIX16CC06, XPIX40CC06, XPIX40CC08, XPI63CC10) are installed between the single CU conductors.

The insulation plates are built in a modular design and can be installed later (after copper-plating incl. stabilisers). These additional partition walls are to be applied in the switches as follows:
IZMX16 at a 600mm field depth, IZMX40 at 600mm and 800mm field depths, IZM63 at a 1000mm field depth.

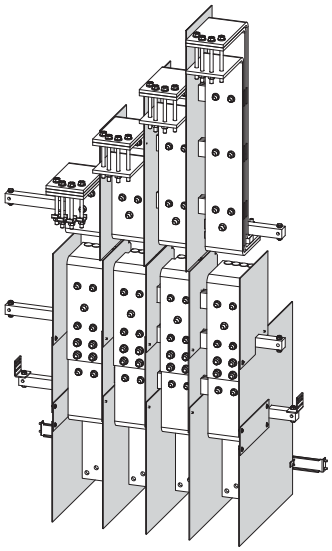
Partition walls in a modular design

Order data

Order no. per P.U. (P.U. = 1 set)

Roof sheet with arc protection

400mm depth	600mm depth	800mm depth
XSPTA0404: 107256 / 122515*	**XSPTA0406:** 107257 / 122516*	**XSPTA0408:** 107258 / 122517*
XSPTA0604: 107259 / 122518*	**XSPTA0606:** 107280 / 122519*	**XSPTA0608:** 107281 / 122520*
XSPTA0804: 107282/ 122521*	**XSPTA0806:** 107283 / 122522*	**XSPTA0808:** 107284 / 122523*
XSPTA08504: 143378 / 143514*	**XSPTA08506:** 143380 / 143516*	**XSPTA08508:** 143381 / 143517*
XSPTA1004: 107285 / 122524*	**XSPTA1006:** 107286 / 122525*	**XSPTA1008:** 107287 / 122526*
XSPTA1104: 143383 / 143519*	**XSPTA1106:** 143385 / 143521*	**XSPTA1108:** 133016 / 133064*
XSPTA1204: 107288 / 122527*	**XSPTA1206:** 107289 / 122528*	**XSPTA1208:** 107290 / 122529*
XSPTA13504: 143387 / 143523*	**XSPTA13506:** 143389 / 143525*	**XSPTA13508:** 133017 / 133065*

Arc partition for XP fields

Suitable for 3- and 4-pole XP fields
For supply and leakage of the circuit breaker
Consisting of: partition walls, angle brackets, braces and screw material

Field depth	Switch type		
	IZMX16	**IZMX40**	**IZM63**
600mm	**XPIX16CC06:** 171734	**XPIX40CC06:** 171735	
800mm	**XPIX16CC06:** 171734	**XPIX40CC06:** 171736	**XPI63CC10:** 171737

Arc barrier – Main busbar

It is mounted at the end of the main busbar (between the side wall and the main busbar) so that a flashover of the arc on the side wall can be excluded.
Consisting of: partition wall and screw material

XBI-P: 171738

CU busbar implementation

As a function partition seal, from field to field, suitable for all current strengths/rail sizes (through precuts for breaking out) in 3- and 4-pole design
Consisting of: 4-pole dividing plate, dividing plate for PEN, angle profile and screw material

XPBSS-5: 151683

www.eaton.eu

Powering Business Worldwide