Power Xpert® CX Low Voltage Motor Control and Power Distribution Center

Powering Business Worldwide

Operations consisting of installing, connecting, operating, checking, commissioning, decommissioning and maintaining low-voltage switchgear of the Power Xpert CX type must only be carried out by authorised personnel.

Table of contents

1 Introduction

1.1 General system description

The Power Xpert® CX system is a low voltage switch and distribution-system made up of standard sheet steel cubicles, suitable for both power distribution and as a motor control center.

The system is designed for a nominal service-voltage of 415 V. The maximum nominal current of the horizontal busbar system is 4000 A, the maximum rated short-time current is 100 kA rms-1s.

The outgoing feeders can be in fixed or withdrawable versions. The innovative design makes the Power Xpert® CX system especially suitable for applications where the delivery of electrical energy is business critical:

- Water Industries
- Pharmaceutical Industries
- Industrial Facilities
- Food & Beverage
- Infrastructure
- Pulp & Paper
- Mining Industries
- Steel Industries
- Oil & Gas Industries

1.1.1 System type

Power Xpert® CX is verified by testing according to IEC EN 61439-2 guaranteeing maximum operational and personnel safety.

1.1.2 System construction

A Power Xpert® CX installation is constructed of sheet metal structures. The outer sidewalls, back plate and all front covers are epoxy coated. Corrosion resistant zinc coated sheet steel plates are used for the rear and inner walls and for compartment separation.

Power Xpert® CX switchboard panels are clearly structured in 3 different areas: the busbar area where the horizontal and vertical busbars are located.

The other two zones are the cabling area and the equipment area where the functional units are located. The IEC 61439-2 standard defines the forms of internal separation. In Power Xpert® CX separation is possible in Form 3b and 4b solutions. This means the separation of busbars from the functional units and separation of all functional units from one another.

The main busbar system is located in the back of the panels. This assures maximum distance between the busbars and the operator and maintenance staff. It can be placed either in the top-rear or bottom-rear position. Corner structures can be placed to fit the switchboard in the room to accommodate for L, U or other shaped installations.

1.1.3 Options

The installation may be provided with optional equipment such as plinths (100 mm or 200 mm), automatic transfer system Otonet, or Power Factor Correction Equipment. For further details, see technical data.

1.2 Using the manual

1.2.1 Target group

The switchgear is designed for use by personnel who are expert or adequately trained in using switchgear and/or carrying out electrical operations.

The information corresponds as closely as possible with the supplied product. However, due to Eaton's policy of continuous product improvement, it is possible that certain details will vary.

The information in this manual will guide the user of the product through all the facets of the operation and the commissioning and maintenance for which the product is designed.

The various possibilities, the assembly instructions, and applications, etc. are however non-binding, serving for reference purposes.

Eaton products are supplied in accordance with the general terms and conditions of sale and supply which have been lodged with the Chambers of Commerce. This product manual in no way affects these general conditions.

1.2.2 Structure of the manual

The manual contains 9 chapters.

Chapters 1 and 2 contain general information on the system design and construction and general safety aspects. The information is presented in the form of descriptive texts, supported by illustrations as necessary. Illustrations are numbered consecutively for each chapter, and are captioned if necessary.

Chapters 3 to 6 consist mainly of procedures. These procedures contain step-by-step descriptions of actions in the order in which they should be carried out. Illustrations are on the same page as the relevant step and have the same number as the paragraph.

WARNING

Never take any action without knowing what effect it will have.

REMARK

Read through all actions first, using the relevant figures. Contact Eaton if you do not understand what you have to do.

Further information regarding chapters 3 to 7 is given below.

Chapter 3 & 4 – Setting up the system

This chapter contains instructions on transport, assembly and busbar coupling.

It also describes what is required for the operating area and gives an overview of connection possibilities.

Chapter 5 - System operation

This chapter is aimed at the operator, who is expected to operate and monitor the system independently. For that reason, these activities are described in detail.

Chapter 6 – System inspection, maintenance and repair

This chapter describes only those operations that may be carried out by the user.

NOTE

Operations not included in the manual must be carried out by or under the supervision of Eaton.

Chapter 7 – Data Outgoing Units

This chapter contains multiple lists with data outgoing units for Direct-on-Line (DOL), Forward Reverse (FR), and Star-Delta (SD) motor data, with the most important information.

Chapter 8 – Accessories and spare parts

This chapter contains information about accessories and the spare parts.

Chapter 9 - Appendix

This chapter contains information about the contents of the information package.

2 Safety instructions

Read this user manual carefully before commissioning the switchgear. Make sure that you have read and understood all safety warnings and instructions.

2.1 General instructions

Eaton has done its utmost to inform you as accurately and as fully as possible concerning any dangers involved in using the system. You yourself are responsible for supervising implementation of the instructions contained in this manual.

2.1.1 Personnel

The user has to make sure that personnel is qualified to carry out the task.

2.1.2 Safety of bystanders

Access to the equipment is to be limited to those directly involved in operating or maintaining it. Other persons must not remain in the vicinity of the equipment. During switching operations, no personnel must be above the installation.

2.1.3 Safety plan

It may be necessary to draw up a safety plan. Comprehensive advice on this should be obtained from the relevant authorities (fire brigade, local authorities, occupational health & safety, company safety department, first aid service etc.).

2.1.4 Safety standards

Power Xpert® CX switchgear complies with the following standards:

IEC 61439-1:	Low-voltage switchgear and controlgear assemblies - Part 1: General Rules
IEC 61439-2:	Low-voltage switchgear and controlgear assemblies - Part 2: Power switchgear and controlgear assemblies
IEC 60529:	Degrees of Protection provided by enclosures (IP Code)

2.2 Safety of the switch room

The installation and the switch room must comply with all applicable local safety regulations.
The switch room is the room in which the switchgear has been set up and must meet at least the following requirements:

2.2.1 Clear space

To the front and rear of the switchgear, and between two installations sited opposite each other, enough space must be reserved over the entire length of the installation to allow compartments to be withdrawn, racking out of circuit breakers, and operations to be carried out. Eaton recommends a dimension of at least 1.5 m in front of the switchgear and 0.5 m at the rear of the switchgear if rear access is required. Note that the Switchgear is designed to allow for back to wall installation in which case no clear space at the rear of the switchgear is required. In connection with heat dissipation there should be a distance of approx. 100 mm between the rear of the switchboard and the wall.

2.2.2 Height

There must be a free space of 200 mm available above the switchboard, for fitting of the busbar trunking and/or cable mounting.
For cubicles with a standard height of 2000 mm, this means a room with a minimum height of 2200 mm. If a plinth is to be used, a further 100 or 200 mm must be added.

2.2.3 Escape routes

The width of the escape route in front of any cubicle, with its door opened 90 degrees, shall be at least 500 mm. It is recommended that a lifting trolley be used for the removal of air circuit breakers (handling safety requirement).
The use of a lifting trolley for circuit breakers will require additional space (at least 400 mm) for access and maneuverability of the trolley.

REMARK

The installation may be set up with the back near a wall. In that case there will be no clear area or escape route at the rear.

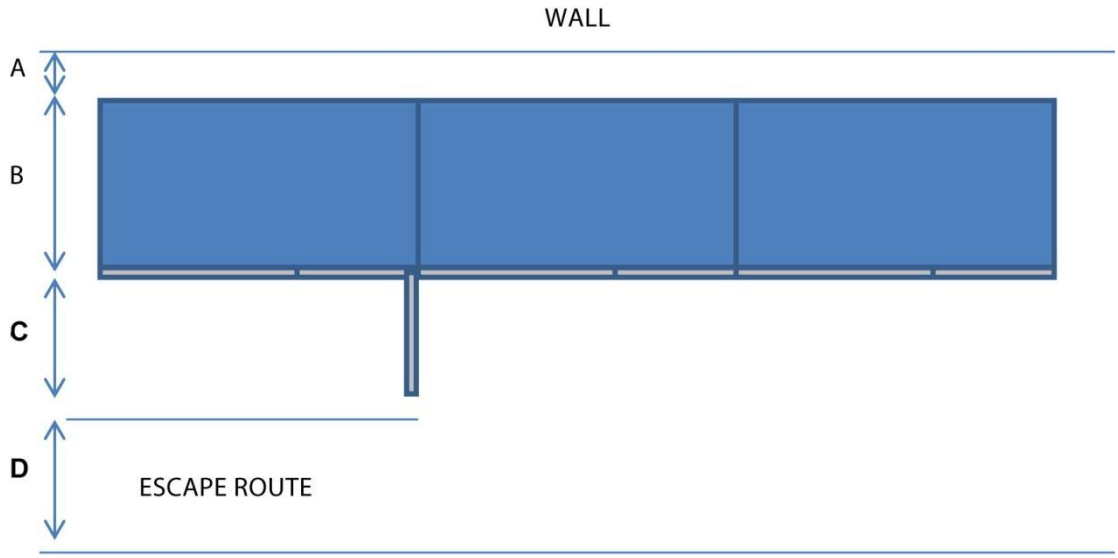

Fig. 2-1 Escape Routes Overview

Busbar rating	A	B	C (cable way 400 mm)	C (cable way 600 mm)	D
Up to 3200 A	> 50 mm	600 mm	400 mm	600 mm	500 mm
Up to 4000 A	> 50 mm	800 mm	400 mm	600 mm	500 mm

2.2.4 Entrances

Entrances to the switch room and escape routes must be kept clear at all times.
Entrances must be provided at suitable places and must be at least as wide as the width of panel plus 0.2 m and the height of panel plus 0.2 m. For details of the width and height of panel, see chapter 2. They must be accessible via the escape routes. It must be possible to open doors outwards from both sides without the use of aids.

2.2.5 Storage of (spare) materials

- Storage is only allowed in dry rooms.
- Don’t place large drawers on top of each other
- Do not expose the modules to bigger temperature variations.

2.2.6 Availability of extinguishers

Suitable extinguishers must be present in and around the switch room. Obtain expert advice (fire brigade) on the best choice and location of the extinguishers.

2.2.7 Notation guide

This manual uses warning boxes to alert the user to possible dangers while operating or maintaining the equipment:

WARNING

Personal (fatal) danger to personnel and bystanders.

CAUTION

Danger of damage to equipment.

NOTE

Important note for clarification.

REMARK

Useful advice.

2.2.8 What to do in the event of a fire

In the event of a fire in the switch room, proceed as follows:

- Evacuate all personnel from the switch room
- Call the fire brigade.
- Notify specialists who can switch off the installation completely, i.e. including:
- Low-voltage cables;
- Medium-voltage cables (if present)
- Feedback from the low-voltage side;
- Any other power sources.
- Follow local fire instructions.

WARNING

NEVER ATTEMPT TO EXTINGUISH THE FIRE BEFORE THE INSTALLATION IS COMPLETELY DEAD I.E. ISOLATED FROM THE SUPPLY.

NEVER extinguish with a water jet.

Make sure that no water flows into the installation.

Keep well clear of the installation while the fire is extinguished in the area around the installation. Even using non-conducting extinguishing materials, a voltage may pass through the extinguishing equipment.

Putting the fire out:

- If possible, leave extinguishing the fire to the fire brigade.
- Use non-conducting extinguishing materials.
- If necessary, use extinguishers in the area around the installation. Never attempt to extinguish the installation itself, even if it appears to be dead.

3 Product description

3.1 The system

This paragraph contains a short description of the most common system components. Since each Power Xpert® CX switchgear installation is matched to its application, it is not possible to give a complete and detailed description here. For further information refer to the information pack which includes this manual.

3.1.1 Panels

The panels are compartmented according to the type of function. The compartments are:

1. Component mounting area
2. Cable connection area
3. Vertical busbars
4. Main busbars

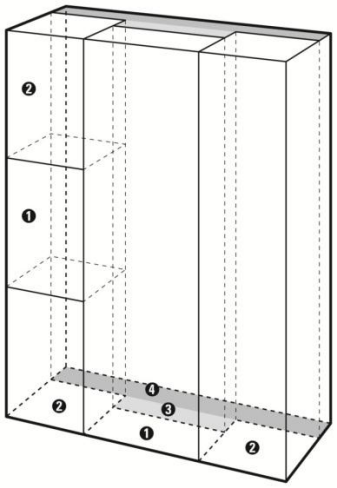

Fig. 3-1 Panel Overview

The cable connection area contains:

- Incoming and outgoing cables,
- Cables for interconnecting the modules,
- Auxiliary accessories (cable clamps, outgoing cable connection units, wiring ducts, etc.).

Fig. 3-2 Panel Overview

3.1.2 Panel Dimensions

Height

Power Xpert® CX cubicles are of a modular design. The standard height is 2000 mm. The space in which apparatus can be fitted amounts to a maximum of 1900 mm in the fixed panels and 1875 mm in the withdrawable panels. The 1875 mm is equal to 25 times the modular height of 75 mm.

Depth

The standard cubicle depth is 600 mm up to a 3200 A rated horizontal busbar system. If the system is equipped with a 4000 A horizontal busbar system the depth is 800 mm.

Width

The width of the cubicles depends on the type and will be explained in the following sub chapters. The available widths are: 600, 800, 1000 and 1200 mm.

Fig. 3-3 Panel Overview with dimensions

3.1.3 Feeder Panels

Features & Benefits

Dimensions:

Height:	2000 mm
Widths:	600 / 800 / 1000 / 1200 mm
Depths:	600 / 800 mm

Withdrawable Circuit Breakers:

- Type NZM
- Type NRX
- Type Magnum

- 3 or 4-pole breakers
- Second set of main busbars to create a buscoupler section
- Up to 4000 A – 100 kA1/s
- Up to Form 4b
- IP31 and IP55

Typical feeder panel lay-out

1. Frame
2. Plinth
3. Back plate
4. Side plate
5. Top covers
6. Bottom cover
7. Doors
8. Mounting plate breaker
9. Section plates
10. Main Busbar System Holders
11. PVC-shielding plate
12. Shielding Main Busbar / Equipment Area
13. Shielding Main Busbar / Equipment Area
14. Shielding Main Busbar / Equipment Area
15. Shielding Main Busbar / Connection Area
16. Door locks

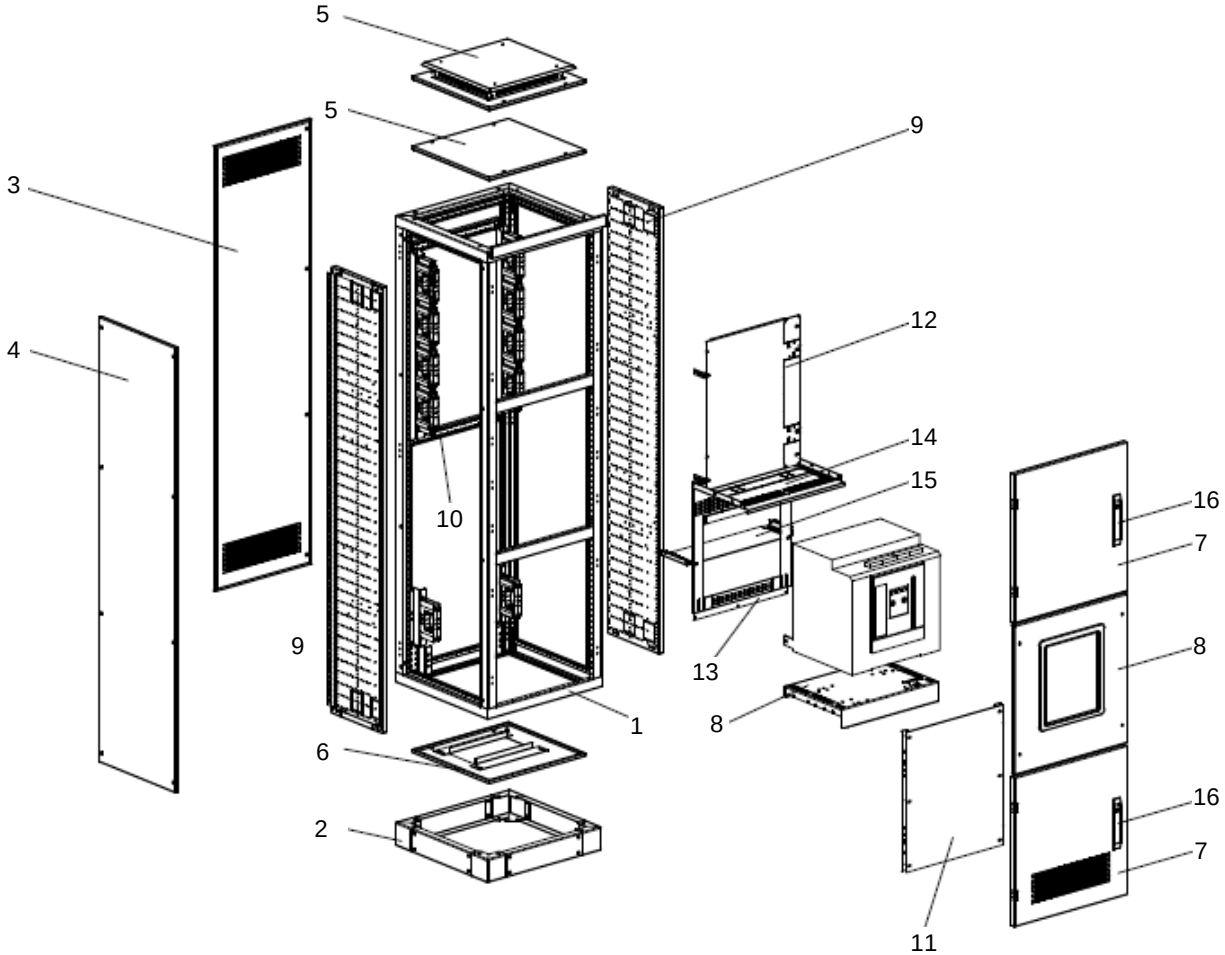

Fig. 3-4 Typical feeder panel lay-out

3.1.4 Withdrawable Panels

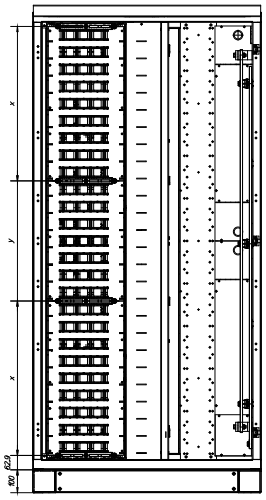

Fig. 3-5 Withdrawable Panel Overview

3.1.5 Withdrawable units

Withdrawable units are consisting of:

- The withdrawable unit
- The frame-mounted module compartment.

Standard sizes of withdrawable compartment are 75, 150, 225, 300, and 450 mm; above this the 600 and 750 mm high compartments are fixed.

Withdrawable compartment sizes consist of (see picture):

1. Base plate
2. Mounting plate – depending on the height this is a different version. For example in the 75 mm this is an integrated DIN mounting rail.
3. Front module.
4. Incoming contacts.
5. Outgoing contacts.
6. Auxiliary contacts.

The front modules of all the compartments consist of a 2 mm steel plate door with additional functionality in a thermoplast (halogen-free, fire resistant) cover like: ergonomically designed handles to put the compartments in/out and change positions, flexibility of changing pushbuttons, indication lights as the customer sees fit.

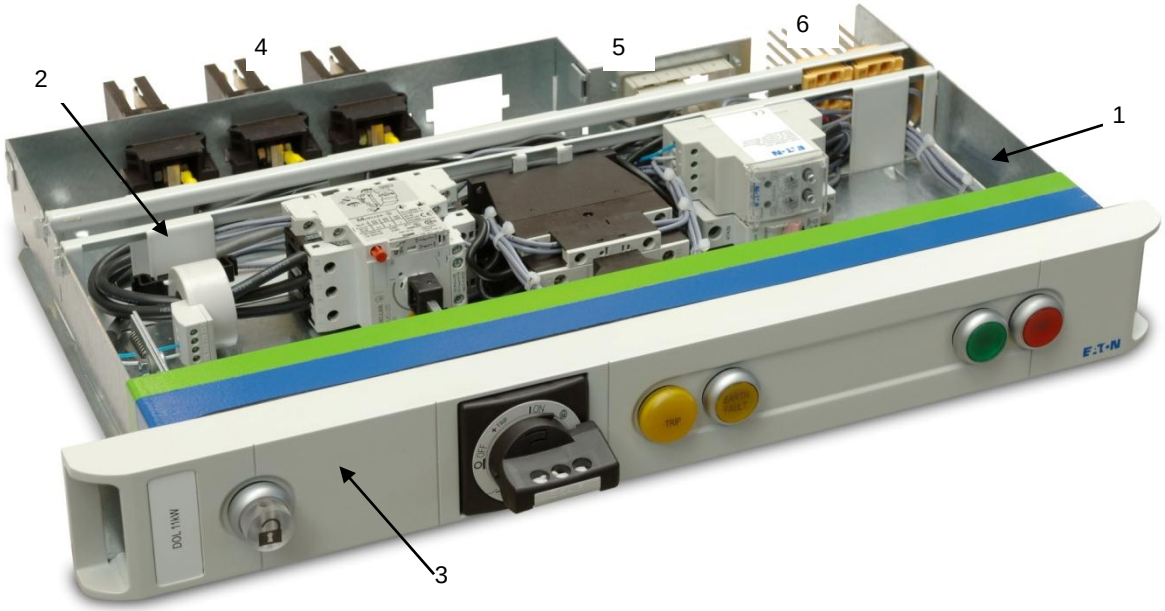

Fig. 3-6 Withdrawable unit

3.1.6 Withdrawable units: Dimensions

The maximum height of the compartment area is up to 1875 mm. The connection type of withdrawable modules (main and control circuit) are on both the incoming and outgoing side with plug type contact blocks.

Compartment shelf-boards can be mounted at individual heights, depending on the rating of the modules

Module height = 75 mm

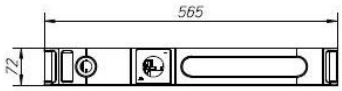

Module height = 150 mm

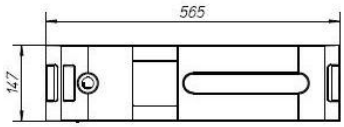

Module height = 225 mm

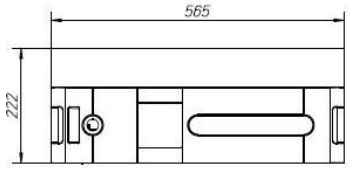

Module height = 300 mm

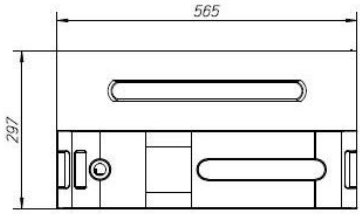

Module height = 450 mm

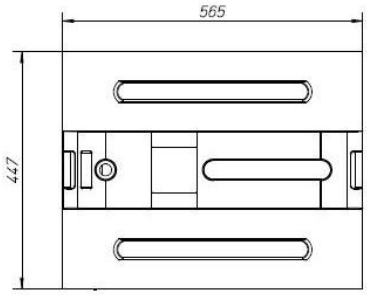

3.1.7 Setting or adjusting the protection level

The settings for overcurrent- and short circuit protection are adjustable on the front face of the MCP or MCCB.

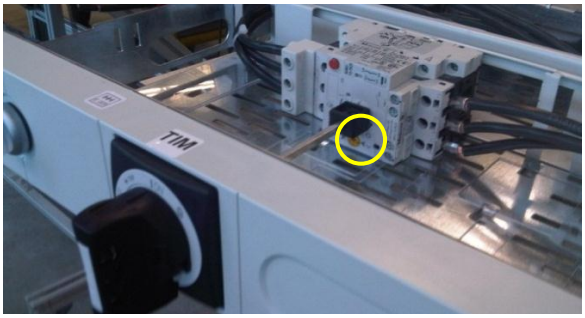

Fig. 3-7 MCP Settings adjustment (1)

In the small drawers the adjustable knobs can be reached with a small screwdriver.

Fig. 3-8 MCP Settings adjustment (2)

If the adjustable knob cannot be reached as described above, the front will have to be removed (screws on the sides). This gives full access to all forward mounted components.

Fig. 3-9 MCP Settings adjustment (3)

On smaller drawers it is done like above. On larger drawer please refer to Fig. 3-10.

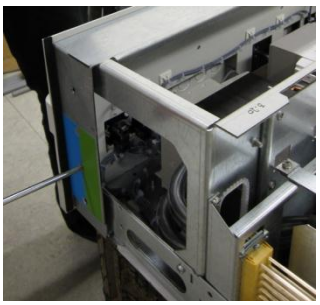

Fig. 3-10 MCP Settings adjustment (4)

3.1.8 Adjusting the earth fault protection relay

The settings for the earth fault protection relay can be adjusted with the grey knobs on the earth fault protection relay. These are accessible from the rear side of the drawer.

Fig. 3-11 Earth Fault Relay settings adjustment (1)

Fig. 3-12 Earth Fault Relay settings adjustment (2)

3.2 Busbar Systems

The following busbar systems can be installed:

- Horizontal busbar system
- Vertical busbar system
- Protective earth and neutral conductor bars (PE+N/PEN)

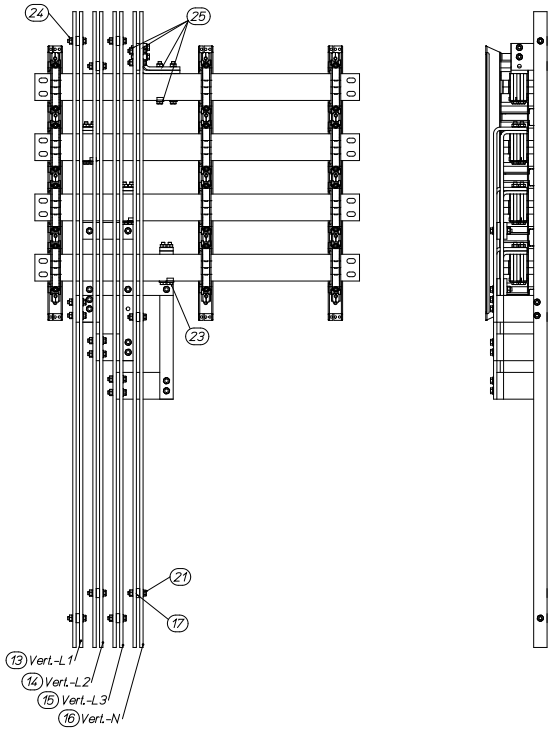

Fig. 3-13 Horizontal and vertical busbar

3.2.1 Horizontal Busbar System

The busbars are arranged in the rear section (busbar compartment) of the cubicle horizontally in two selectable positions:

- Single horizontal busbar systems are located at the top or bottom location in the panel
- Dual horizontal busbar systems are located at the upper and lower level (i.e. in case of buscoupler)
- Depending on the current 1, 2 or 3 conductors per phase are used.
- The busbar system can be realized both as 3-pole or 4-pole version.
- Every section has its own horizontal busbar system

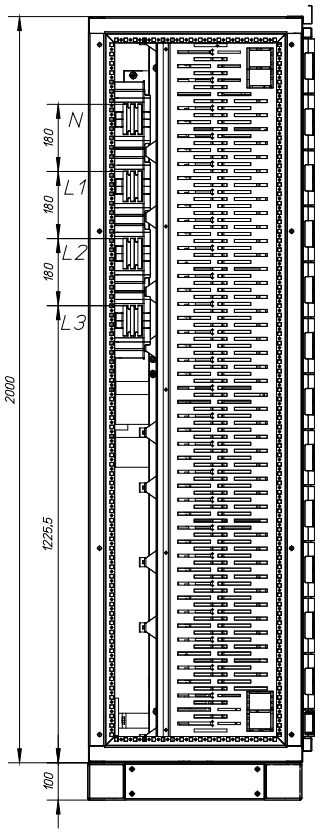

Fig. 3-14 Panel side view with rear/top position busbar

3.2.2 Vertical Busbar System

The vertical busbar system is located behind the functional area and is the connection link between the busbars and the functional modules:

- Systems can be installed with fixed or withdrawable busbar systems.
- There are 25 openings for contact plugs in the withdrawable systems have a pattern (degree of protection IP 2X) at every 75 mm.
- Additional shutters can be placed to shield the functional compartment completely from the busbar area.
- The distribution bars are installed for the full height of the available functional area.

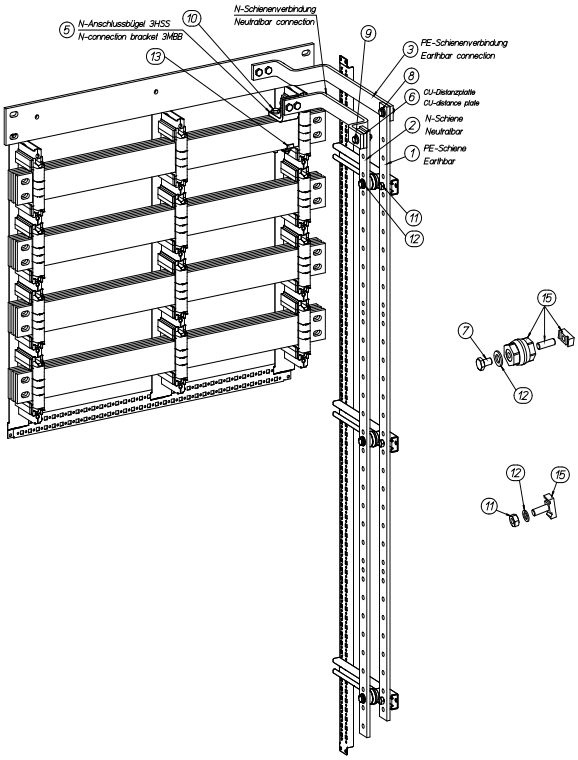

Fig. 3-15 PEN connection lay-out

3.2.3 Protective earth and neutral conductor bars

The protective earth bar (PE) is mounted horizontally in the top or bottom back section of the cubicle and is depending on the horizontal busbar position.

Parallel to this the neutral bar (N) is mounted on insulators. The lengths of the bars correspond to the structure length.

The protective connection bar is arranged vertically in the cable compartment. Parallel to this the neutral connection bar is mounted on insulators.

All PE+N/PEN-bars and connection bars are punched according to a grid system which permits the bars to be mounted in the cubicle and the outgoing cables to be connected as required.

3.2.4 Busbar Supports

For support of the vertical and horizontal busbars the moulded busbar holder sets are used. They are placed at an interval depending on the sections width.

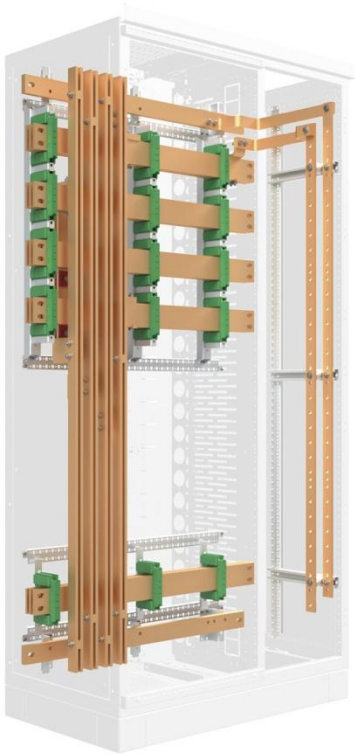

Fig. 3-16 Horizontal and vertical busbar with busbar supports

3.2.5 Short Circuit Ratings

Depending on the amount of busbar holders and the number of busbars the following ratings apply to the horizontal busbars.

Horizontal **Busbar cross section**			
Phase and Neutral Busbars	PE Busbar (PEN=?)	Rated Current	Rated short time withstand current
mm	**mm**	**A**	**kA rms**
2 x 40 x 10	1 x 40 x 10	1600	65
2 x 60 x 10	1 x 60 x 10	2000	80
2 x 80 x 10	1 x 80 x 10	2500	80
3 x 80 x 10	2 x 60 x 10	3200	100
3 x 80 x 10	2 x 80 x 10	4000	100
Vertical **Busbar cross section**			
Phase and Neutral Busbars	PE, N Busbars (cable compartment) (PEN=?)	Rated Current	Rated short time withstand current
mm	**mm**	**A**	**kA rms**
1 x 40 x 10	1 x 30 x 10	1000	80
2 x 40 x 10	1 x 40 x 10	2000	80

3.3 Cable Entry and connection for incoming and outgoing feeders

3.3.1 Feeder Columns

For cubicles with an incoming or outgoing feeder in 1 column, cables can be fed through a plate either in the upper or lower part of the cubicle. In the case of bottom cable entry the cubicles may also be sealed using plastic foam. Entry is also possible on request using rubber grommets or cable glands. The cables are connected to the copperstrips connected to the components.

3.3.2 Withdrawable Units

For cubicles designed for more than one outgoing feeder or motor starter, there is a cable compartment on the right-hand side closed with a door. Cable entry also takes place from below and/or from above, use being made of a feed through plate at the bottom or top, with a plastic-foam seal at the bottom. Strips are mounted to the right-hand side wall of the cable compartment to which cables can be attached using clamps.
The cables will be connected to the terminals located in the cable compartment. These will be either in Form 3b or 4b versions.

Fig. 3-17 Cable connection for withdrawable units

3.3.3 Fixed Units

Main current cables of outgoing feeder units in the fixed versions are connected directly to the equipment using cable lugs or terminals.

3.4 Safety features

The switchgear may be provided with the following safety features:

- A sheet steel enclosure to protect against contact with live components.
- Compartments with earthed steel walls in either Form 3b or 4b degree of separation.
- Optional shutters shielding live parts when a switch is withdrawn.
- Mechanical interlocks to prevent unintentional switching.
- Provision for locating locks on the operating handles of the compartments and breakers.
- Visible indication of the test and disconnect positions of compartment and breakers.
- Special equipment intended for the earthing of cables and busbars.
- A continuous earthing busbar extending the full length of the installation.
- Locks on panel doors (3 point lock system on full panel height doors)

3.4.1 Execution of work

WARNING

ALWAYS check that the equipment is dead.

Fit suitable earthing.

NEVER approach an unearthed installation.

Ensure maintenance work is carried out timely, in accordance with the instructions in this manual

Replace worn and/or damaged parts only with original Eaton spares or spares approved by Eaton.

Take the following minimum precautions when carrying out work:

Working on live or partly live installation:

- Clearly indicate the working area.
- Make sure that the installation is clean and dry; check for leakage paths where voltage could track to the outside.
- Fit earthing to the panel, which is being worked on; only operate on earthed panels.
- Always check that the part that is being worked on is voltage free.

Working on a voltage free installation:

- Fit earthing; work on earthed panels only.
- Always check that the system is voltage free.

When re-commissioning:

- Check that all the work in the immediate area has been completed.
- Check (if necessary) that all related work in other areas has been completed.
- Check the safety of all personnel concerned.
- Remove safety earthing and other safety provisions.

3.4.2 Safety markings

These signs further indicate possible dangers:


Dangerous electrical voltage


Electrical safety earth

3.5 General technical data

This paragraph contains only general technical data. For details concerning any particular installation, see the information pack supplied with the installation, which includes this manual.

3.5.1 Electrical data

System	Power Xpert® CX
Rated operational	400/415/440 V
Rated frequency	50/60 Hz
Main busbar data	
Rated insulation voltage	1000 V
Rated impulse withstand voltage	12 kV
Rated current	Up to 4000 A
Rated short-time withstand current	Up to 100 kA 1 s
Rated peak withstand current	Up to 220 kA
Vertical distribution busbar data	
Rated insulation voltage	1000 V
Rated impulse withstand voltage	12 kV
Rated current	2x500 (1000) / 2x1000 (2000) A[1)]
Rated short-time withstand current	65 and 80 kA, 1 s
Rated peak withstand current	Up to 176 kA
Enclosure data	
Degree of protection	IP31 and IP55 with closed doors, IPXXB with open doors
Form of separation	Form 3b and Form 4b
Entry of cables	Top and/or bottom
Access	Front
Standard Color	RAL 7035

Note 1. The distribution busbar is central fed. The current is equally divided over the lower and upper half of the distribution busbar.

3.5.2 Environmental conditions

Item	Value
During operation	In accordance with IEC 61439-1 par. 7.1.1, Limit values below, among others, apply:
Ambient air temperature – lower limit	-5 °C
Ambient air temperature – upper limit	+40 °C
Ambient air temperature – daily avg maximum	+35 °C
Humidity	50 % at 40 °C (non-condensing), 90% at 20°C (non-condensing)
Pollution degree	Industrial: 3
Altitude	2000 m above sea level
Sound level	< 70 dBA
EMC environment (imm./em)	Environment A and B
During Storage	In accordance with IEC 61439-1 par. 7.1.1.

3.5.3 Busbar cross sections and panel dimensions

Busbar Rating (Cu cross sections)	800 A (1 x 40 x 10 mm^2) 1250 A (1 x 60 x 10 mm^2)	1600 A (2 x 40 x 10 mm^2) 2000 A (2 x 60 x 10 mm^2) 2500 A (2 x 80 x 10 mm^2) 3200 A (3 x 80 x 10 mm^2)	4000 A (3 x 80 x 10 mm^2)

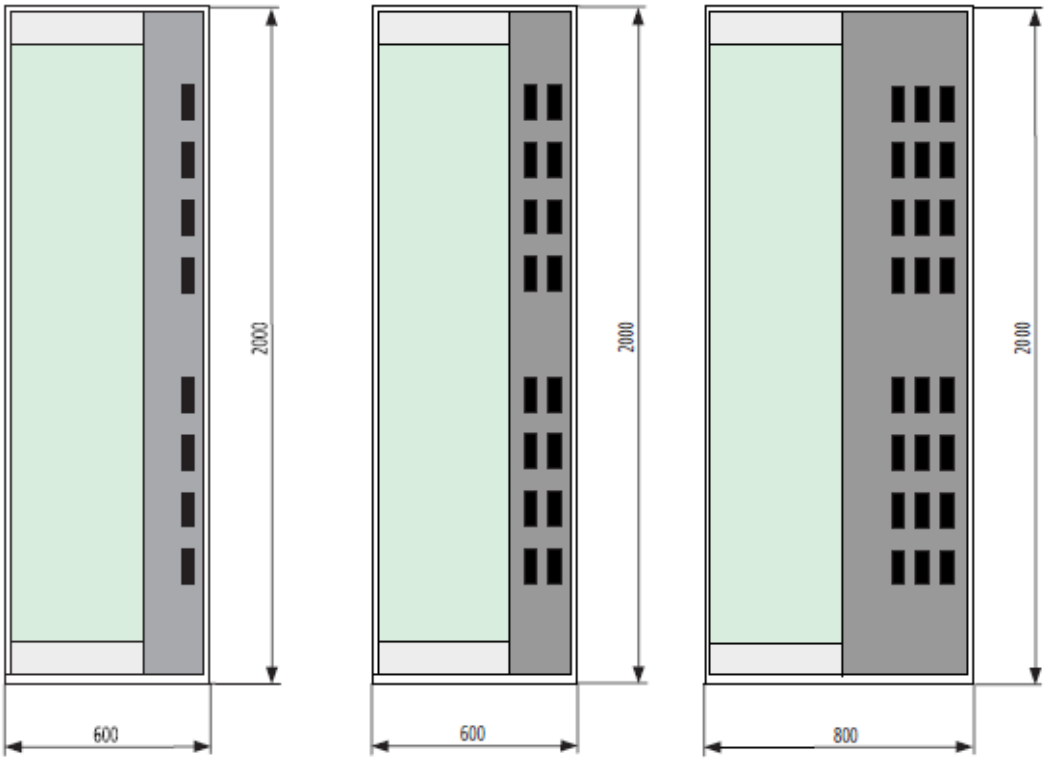

Fig. 3-18 Rear mounted busbar lay-out (panel side view)

3.6 Connection possibilities and ranges

3.6.1 Cubicles with an incoming or one outgoing feeder

There are various possibilities for the connection of these groups:

- Connection using cable-lugs, maximum of two per phase, with the exception of 630 A equipment for which a connection-set has been developed for three cables per phase (copper).
- Using cable-clamping blocks on switches exceeding 1000 A, for one or more cables.
- A connection-set is also available on request for switches exceeding 1000 A, for five cables per phase maximum of 240 mm^2.

3.6.2 Compartments with draw-out units

WITHDRAWABLE STARTER UNITS							
PW 400 V	**Ie**	**Eaton MCP / MCCB**	**Contactor**	**prime power wire**	**comp. size**	**max. main conn.**	**comp. loc.**
0.06 kW	0.2 A	PKZM0-0.25	DILM7-10	2.5 mm^2	75	0.2-10 mm^2	1 .. 25
0.09 kW	0.3 A	PKZM0-0.4	DILM7-10	2.5 mm^2	75	0.2-10 mm^2	1 .. 25
0.12 kW	0.44 A	PKZM0-0.63	DILM7-10	2.5 mm^2	75	0.2-10 mm^2	1 .. 25
0.18 kW	0.6 A	PKZM0-0.63	DILM7-10	2.5 mm^2	75	0.2-10 mm^2	1 .. 25
0.25 kW	0.85 A	PKZM0-1	DILM7-10	2.5 mm^2	75	0.2-10 mm^2	1 .. 25
0.37 kW	1.2 A	PKZM0-1.6	DILM7-10	2.5 mm^2	75	0.2-10 mm^2	1 .. 25
0.55 kW	1.6 A	PKZM0-1.6	DILM7-10	2.5 mm^2	75	0.2-10 mm^2	1 .. 25
0.75 kW	1.9 A	PKZM0-2.5	DILM7-10	2.5 mm^2	75	0.2-10 mm^2	1 .. 25
1.1 kW	2.5 A	PKZM0-4	DILM7-10	2.5 mm^2	75	0.2-10 mm^2	1 .. 25
1.5 kW	3.5 A	PKZM0-4	DILM7-10	2.5 mm^2	75	0.2-10 mm^2	1 .. 25
2.2 kW	5.1 A	PKZM0-6.3	DILM7-10	2.5 mm^2	75	0.2-10 mm^2	1 .. 25
3 kW	6.6 A	PKZM0-10	DILM17-10	2.5 mm^2	75	0.2-10 mm^2	1 .. 25
4 kW	8.2 A	PKZM0-10	DILM17-10	2.5 mm^2	75	0.2-10 mm^2	1 .. 25
5.5 kW	11.2 A	PKZM0-12	DILM17-10	2.5 mm^2	75	0.2-10 mm^2	1 .. 25
7.5 kW	14.5 A	PKZM0-16	DILM17-10	6 mm^2	75	0.2-10 mm^2	1 .. 25
11 kW	21.5 A	PKZM0-25	DILM25-10	10 mm^2	75	0.2-10 mm^2	1 .. 25
15 kW	29 A	PKZM0-32	DILM32-10	10 mm^2	75	0.2-10 mm^2	1 .. 25
18.5 kW	36 A	PKZM4-40	DILM40-22	25 mm^2	150	6-35 mm^2	1 .. 25
22 kW	42 A	PKZM4-50	DILM50-22	25 mm^2	150	6-35 mm^2	1 .. 25
30 kW	57 A	NZMN1-M63	DILM80-22	50 mm^2	150	6-35 mm^2	1 .. 25
37 kW	69 A	NZMN1-M80	DILM80-22	50 mm^2	150	6-35 mm^2	1 .. 25
45 kW	81 A	NZMH2-M100	DILM95-22	50 mm^2	150	16-95 mm^2	1 .. 25
55 kW	99 A	NZMN2-M125	DILM115-22	70 mm^2	225	16-95 mm^2	1 .. 25
75 kW	136 A	NZMN2-M160	DILM150-22	70 mm^2	225	35-150 mm^2	1 .. 25
90 kW	162 A	NZMN2-M200	DILM185A/22	95 mm^2	300	35-150 mm^2	1 .. 25
110 kW	198 A	NZMN2-M200	DILM225A/22	2 x 70 mm^2	450	35-150 mm^2	1 .. 25
132 kW	238 A	NZMN3-ME350	DILM250-S/22	2 x 95 mm^2	450	35-150 mm^2	1 .. 25
160 kW	280 A	NZMN3-ME350	DILM300A-S/22	2 x 95 mm^2	450	50-240 mm^2	1 .. 25

Remarks

- In order to achieve good connection when using 2.5 mm^2 solid wire, the bare conductor must be bent double for each connection to the main connection block.
- When connecting twined cables up to 16 mm^2 to the main connection-block, it is advisable to use cable-end sleeves.
- All 160 A draw-out units, 2 x 125 mm high and larger, may, on request, be supplied with terminals for optimum connection of 2 x 95 mm^2 (copper).
- When two or three draw-out units are placed next to each other in one compartment, connection is made to terminals located in the cable-compartment 1).
- The connection range of the respective terminals is:
  - main current, maximum 10 mm^2
  - auxiliary current, maximum 2.5 mm^2
- A maximum of twenty 2.5 mm^2 leads may be connected to the auxiliary connection-block.

4 System assembly

If required the switchgear can be transported and installed by specialist personnel from Eaton. This chapter contains information on transporting and setting up Power Xpert® CX switchgear.

4.1 Environmental requirements

The switch room in which the switchgear is set up must comply with the following:

- All safety regulations applicable locally;
- The requirements set out in the chapter on safety
- The requirements in this paragraph.

4.1.1 Climate

In accordance with IEC 61439-1 par. 7.1.1 the climate in the switch room must comply with the following:

Humidity: 90% Maximum relative over a period of 1 month. In new buildings it is essential to dry out the area before installing the system.

- Temperature:
    - Maximum +40 °C, measured over a period of 24 hours.
    - Average not more than +35 °C, measured over a period of 24 hours..
    - Minimum not less than -5 °C, measured over a period of 24 hours.
- The room must be free from dust, corrosive or flammable gases and salts.

If the installation has to operate in a less suitable operating environment it may be necessary to take special precautions. Users should consult Eaton.

4.1.2 Room for extension

If necessary reserve sufficient space for later extension of the installation. The system can be extended on both sides.

4.1.3 Floor

The floor of the operating area should comply with the following:

- The floor must be flat and level to within ± 2 mm;
- The floor must not have any raised areas (bumps) though indentations are permitted;
- The floor must be of adequate strength.

Sections or foundation frames set in the floor can be used as the support surface for the installation. The area between the floor sections and the panel must always be filled in with filler plates to create a suitable support surface.
Details on the dimensions and weight of the switchgear can be found in the floor plan drawing in the information pack (see example next page).

4.1.4 Floor plan

The illustration on the next page gives an example of how equipment is set up.
Use this example or the floor plan in the information pack to check that the floor recesses are the right size and executed correctly.

4.1.5 During transport and storage

If the switchgear panels are stored temporarily prior to installation, or during transport:

- Do not unpack the switchgear panels;
- Store the switchgear panels vertically in a dry and dust-free area;
- Ensure that the transport and storage environment complies with the requirements of IEC 61439-1, par. 7.1.1;
- Avoid condensation caused by rapid temperature changes.

NOTE

If the installation is kept in poor conditions in the open air, corrosion and a reduction in the level of quality may result.

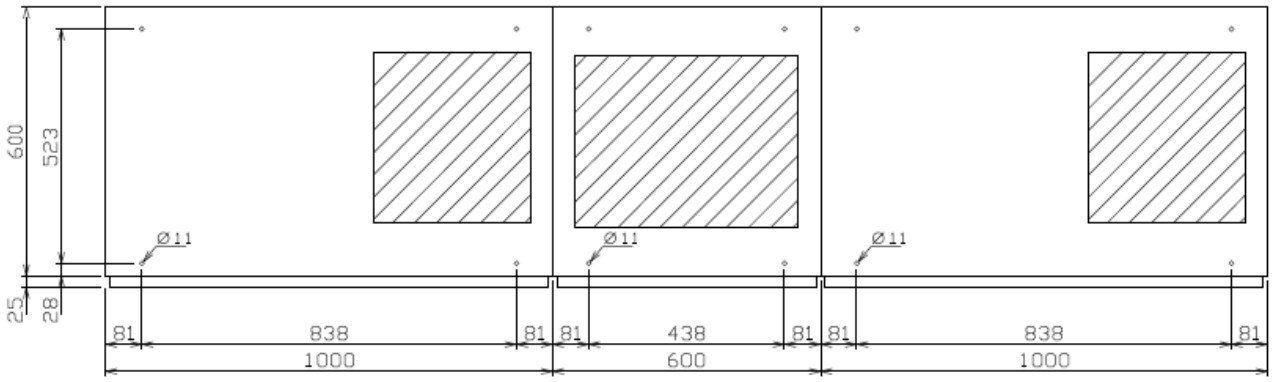

Fig. 4-1 Detailed floor plan (with cable entry positions) for Power Xpert® CX switchgear

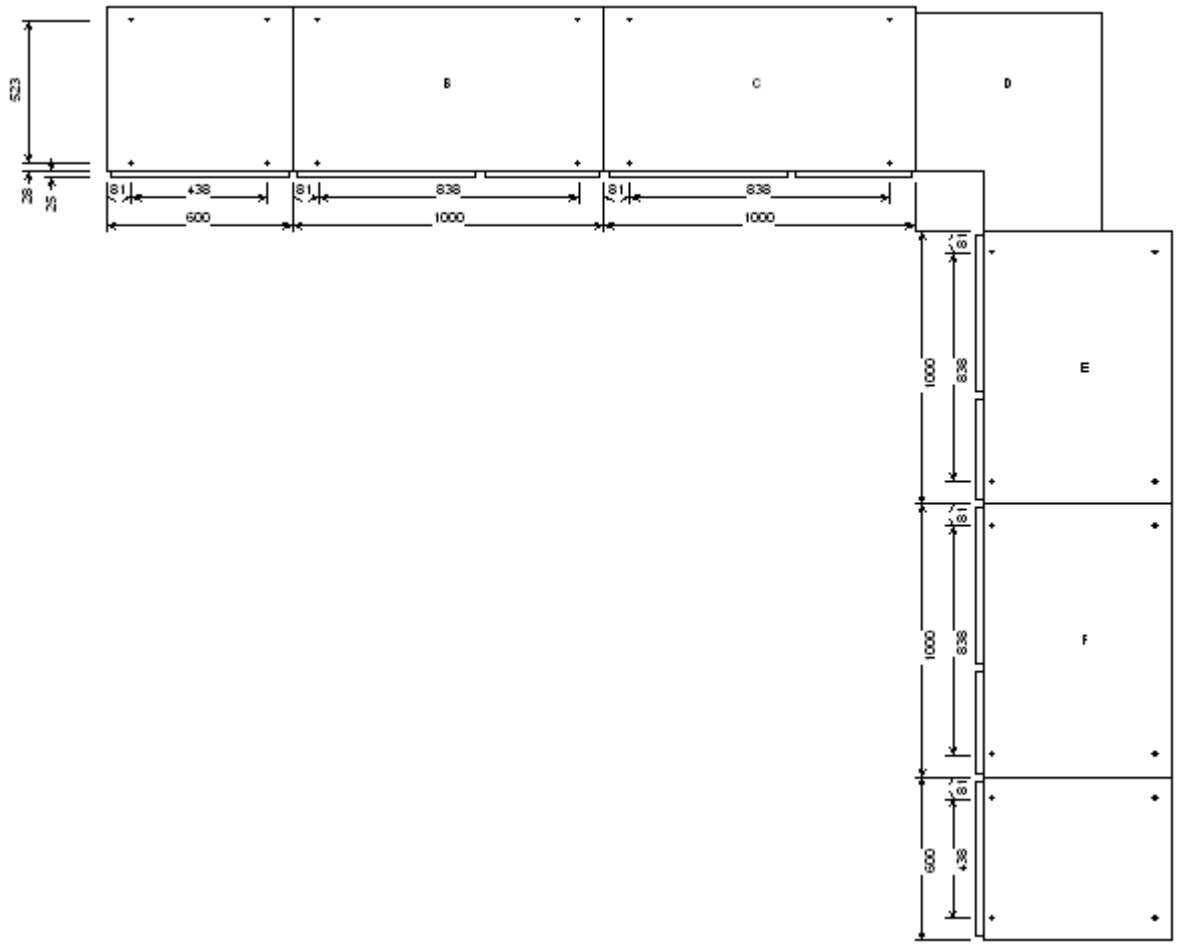

Fig. 4-2 Detailed floor plan (with cable entry positions) for Power Xpert® CX switchgear with corner structure

4.2 System transport

Shipment

On-site delivery is contingent on the presence of an appropriate access route.
A Power Xpert® CX installation is normally transported in individual sections. The sections can be assembled on site. When they are shipped with more than 1 section then the maximum length is 2400 mm. The sections are placed onto pallets and are packed in styro foam and plastic foil to prevent against damage. The pallets are attached to the equipment by means of steel straps.

4.2.1 Delivery inspection

The cubicles should be unpacked and inspected for transport damage and/or missing parts. Should any parts be missing or cubicles have incurred damage during transport, please advise the transport service and Eaton within seven calendar days of receipt, in order for the claim to be settled.
When inspecting Cubicles, locate and identify any fixing kits etc., also remove any transport packing from within compartments, before assembly and putting the switchboard into service.

4.2.2 Instructions for transport

The user is to follow the supplier's instructions.

Transport

During transport, suitable precautions are taken:

- To prevent intrusion of dust.
- To prevent intrusion of moisture (e.g. rain).
- To prevent against damage.

Lifting

Lifting under normal conditions

- See that the work area is clean and safe; obey the local statutory provisions.
- Never stand under a hoisted load.
- The angle of the lifting chain or strap relative to the lifting point must never be larger than 90°.

Lifting under cold conditions

- See that the work area is clean and safe; obey the local statutory provisions.
- Never stand under a hoisted load.
- The angle of the lifting chain or strap relative to the lifting point must never be smaller than 45°.
- Between -5 °C and -19 °C, the workload is to be reduced by 25% if the used lifting gear is made from steel, which complies with or is less than grade B of the Euro norm 25-67.

Lifting under windy conditions

- See that the work area is clean and safe; obey the local statutory provisions.
- Never stand under a hoisted load.
- The angle of the lifting chain or strap relative to the lifting point must never be larger than 90°.
- The lifting operation has to be stopped if the wind force exceeds force 7 on the scale of Beaufort (more than 13.9 - 17 m/s). If lifting takes place at great height lifting must be stopped earlier.

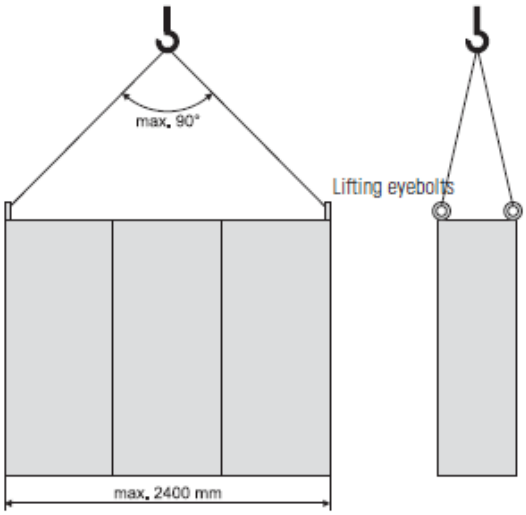

Fig. 4-3 Lifting instructions

4.2.3 Transport in the operating area

The installation can be moved in the operating area by means of all suitable aids. This can vary from solid bars, lifting trolleys, inside cranes or forklift trucks.

1. Lift the Power Xpert® CX on one side and put a solid bar under the installation.
2. Repeat this until a bar is present under each section.
3. Put some bars in front of the transport direction and push the Power Xpert® CX towards its final location.
4. Remove the bars in reverse order.

CAUTION

Make sure, under each section a solid bar is always present. This is to prevent sagging.

Lifting trolleys

1. Lift the Power Xpert® CX on one side and put a lifting trolley under the installation end.
2. Support the installation adequately to prevent rolling away
3. Lift the Power Xpert® CX on the other side and put a lifting trolley under the installation end
4. Carefully push the Power Xpert® CX towards its final location.
5. Remove the lifting trolleys in reverse order.

Inside cranes

Transport by indoor cranes is done in the same way as outside transport. Please refer to the applicable paragraph above.

Forklift trucks

Transport by forklift trucks is done in the same way as outside transport. Please refer to the applicable paragraph above.

4.2.4 Installation of a Switchboard

Switchboards are supplied with a standard 45 mm plinth (part of the frame). Position the switchboard on the base frame (if supplied) or directly on the floor in the required location.

- Open the doors of the cable compartments, to gain access to the mounting holes in the bottom of the cubicle.
- Where possible gain access to the equipment sections front located mounting holes in the bottom of the cubicle, by opening the overall door or removing the bottom bolt on cover.
- Insert and tighten the fastening bolts, refit plates and close doors.

4.2.5 Unpacking the delivery

Dispose of the packing material in an environmentally sound manner. It is essential to adequately pack the products so as to avoid damage. All packing materials are inoffensive to the environment and they can be re-used. If any wood is used, it has not been treated chemically. Foils are from polyethylene (PE). CFC-free polystyrene foam is used for padding. These plastics are pure hydrocarbon compounds, so they can be recycled. When incinerated, there will be no emissions that are offensive to the environment.

REMARK

By using and reusing packing materials, we can save on raw materials. This again reduces the amount of waste.

Procedure

1. As required, remove the packaging materials from the equipment.
2. Dispose the packaging materials in an environmental friendly manner.

4.2.6 Inspection of the floor

NOTE

The maximum difference in height with reference to width and length of the installation shall not exceed 4 mm.

1. Prior to the installation, make sure the floor is smooth and level.
2. Find the highest point in the installation area. Installation of the sections should start from this point. Differences in height must be eliminated with the use of leveling plates.
3. Check the location of the recesses with reference to the approved floor plan, which is part of the information package to which this manual belongs.
4. Check the location of the cable trench / cable cellar with reference to the floor plan.
5. If any cables come out of the floor, make sure they are electrically insulated.
6. Put the cables downwards or into the cable cellar/trench in such a way that the Power Xpert® CX switchgear can be installed on top.

4.3 Coupling of the panels

Coupling of the panels can be achieved in 2 ways, before finalizing the coupling of the busbars. In 8 positions on predefined locations (preferred), or as close as possible to these locations in the square hole pattern along the whole height of the panel.

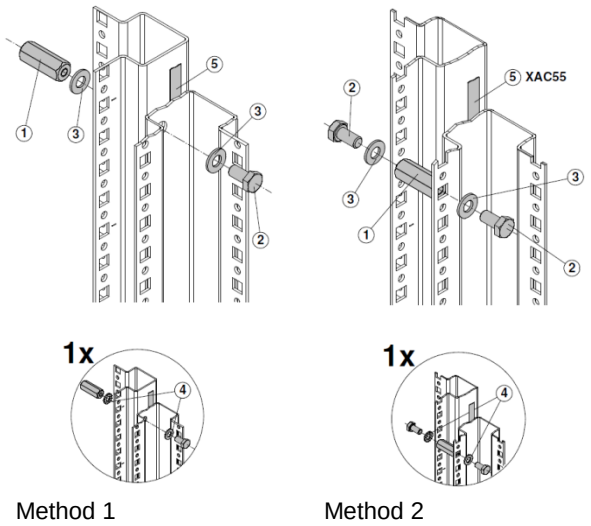

Fig. 4-4 Coupling of a panel

1	M8	8x
2	M8x16	16x
3	8.4	14x
4	Gr.8	2x
5	10x3	10m

Fig. 4-5 Coupling Accessories

4.4 Coupling of the busbars

The first step when coupling the busbars is to loosely attach the connection strips to one of the panels that have to be connected.

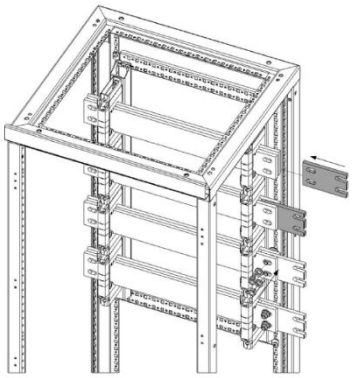

Fig. 4-6 Busbar coupling (1)

The next step is to move the panels towards each other in a straight line until the frame is connected. The busbars should be overlapping in this stage and the panels can be fixed to each other (see chapter: coupling of panels).

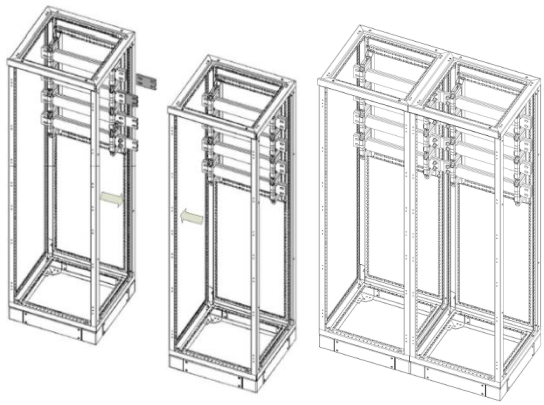

Fig. 4-7 Busbar coupling (2)

The amount and size of connection pieces to be used depends on the main busbar rating and size.

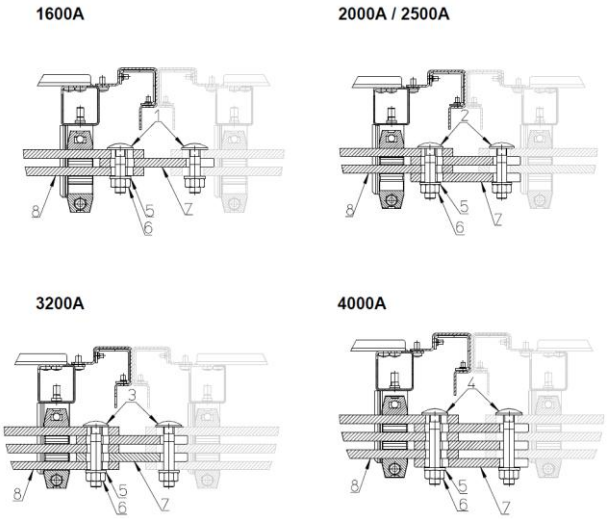

Fig. 4-8 Busbar coupling (3)

The length of the hexagonal socket-head coupling bolts M12 used to clamp the busbars together depends upon the dimensions of the busbars, as shown in the table.

Pos. no.	Menge quantity					Benennung name	Beschreibung specification	Bild picture
	In [A]							
	1600	2000	2500	3200	4000A			
1	2 Stk/**pcs**	-	-	-	-	Flachrundschraube mit Vierkantansatz **Saucer-head screw with square neck**	DIN 603 M12 x 50 – 8.8	
2	-	2 Stk/**pcs**	4 Stk/**pcs**	-	-	Flachrundschraube mit Vierkantansatz **Saucer-head screw with square neck**	DIN 603 M12 x 60 – 8.8	
3	-	-	-	4 Stk/**pcs**	-	Flachrundschraube mit Vierkantansatz **Saucer-head screw with square neck**	DIN 603 M12 x 70 – 8.8	
4	-	-	-	-	4 Stk/**pcs**	Flachrundschraube mit Vierkantansatz **Saucer-head screw with square neck**	DIN 603 M12 x 80 – 8.8	
5	2 Stk/**pcs**	2 Stk/**pcs**	4 Stk/**pcs**	4 Stk/**pcs**	4 Stk/**pcs**	Spannscheibe **Conical spring washer for bolted connections**	DIN 6796-12-FST	
6	2 Stk/**pcs**	2 Stk/**pcs**	4 Stk/**pcs**	4 Stk/**pcs**	4 Stk/**pcs**	Sechskantmutter **Hexagon nut**	DIN EN 24032 M12 – 8.8	
7	1 Stk/**pcs**	2 Stk/**pcs**	2 Stk/**pcs**	2 Stk/**pcs**	3 Stk/**pcs**	Kupfer-Verbindungslasche 40/60/80x10x130 **Copperlinks 40/60/80x10x130**	EN 13601-Cu-ETP-R250	
8	2 Stk/**pcs**	2 Stk/**pcs**	2 Stk/**pcs**	3 Stk/**pcs**	3 Stk/**pcs**	Kupfer-Hauptsammelschiene 40/60/80x10xY **Copper-mainbusbar 40/60/80x10xY**	EN 13601-Cu-ETP-R250	

Main busbar isolation covers have to be installed on both ends of the busbar.

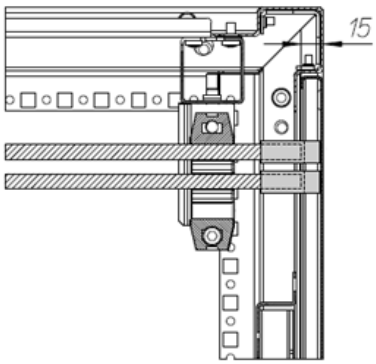

Fig. 4-9 Busbar coupling (4)

4.5 Connection of wiring and cables

Different types of cables can be connected to the switchgear for example 1 or 3 core paper lead, XLPE or synthetic cables.

4.5.1 Connecting a main power cable to the withdrawable unit

Proceed as follows:

1. Open the cable way door
2. Remove the protective covers of the terminals
3. “Open” the terminal to accept the cable
4. Gland the cable at the cable support
5. Strip the cable
6. Connect the stripped cable to the terminal
7. “Close” the terminal when cables are connected

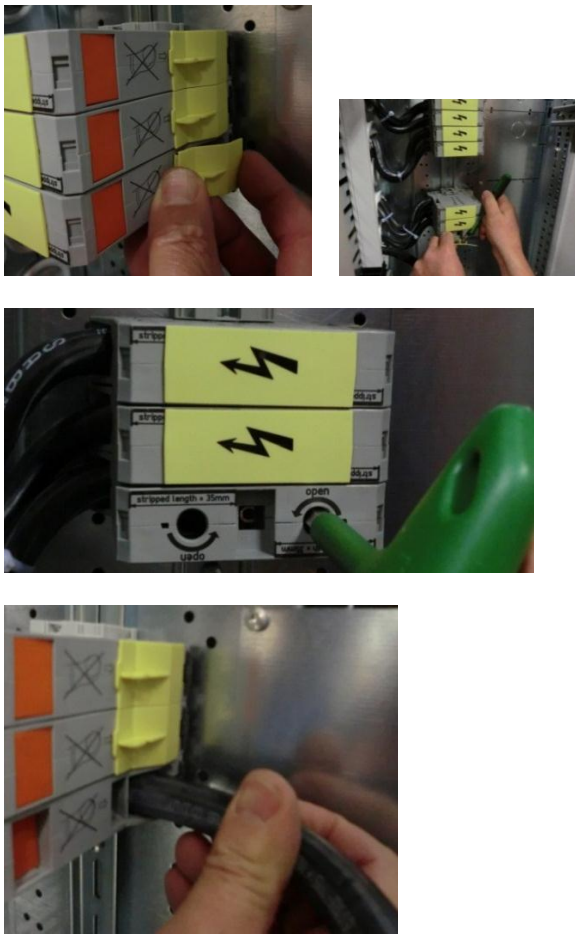

Fig. 4-10 Connecting power cables onto a withdrawable unit

4.5.2 Connecting the auxiliary cables to the withdrawable unit

Proceed as follows:

1. Place the auxiliary wiring in the cable duct that is placed in the cableway
2. Open the terminal with a special tool or flathead screwdriver
3. Connect the auxiliary cable to the right numbered terminal
4. Remove the screwdriver to fix the auxiliary cable

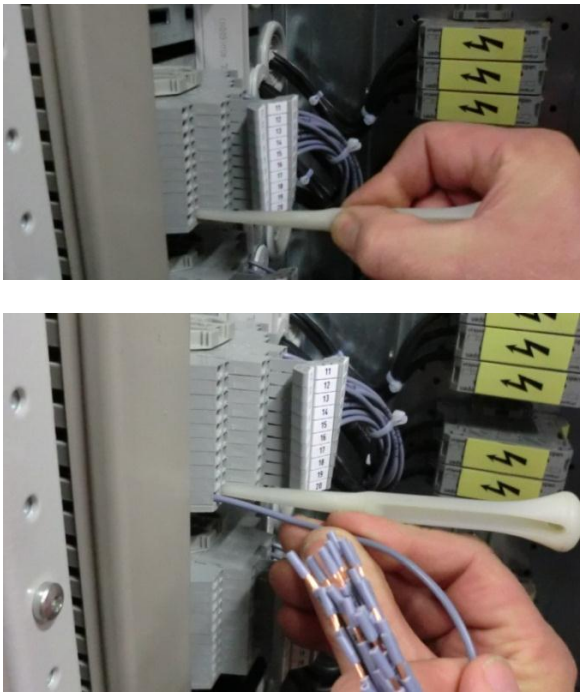

Fig. 4-11 Connecting auxiliary cables onto a withdrawable unit

4.5.3 Connection of main power cable to the air circuit breaker

Proceed as follows:

1. Feed the main power cable trough the glanding plate and gland the cable
2. Connect the cable to either the cable gland or cable shoe that is connected to the equipment like below:

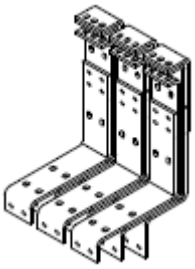

Fig. 4-12 Connection terminals of an Air Circuit Breaker

5 System operation

5.1 Testing

Before putting the switchboard into service routine tests shall be carried out in accordance with IEC 61439 and local regulations. As a minimum routine tests will include:

- Full inspection of the assembly, wiring and electrical operation tests (if necessary).
- A dielectric test.
- Checking of protective measures and electrical continuity of the protective circuit.

This chapter contains the basic operating procedures for components used in Eaton Power Xpert® CX switchgear. Refer to the individual component technical documentation for detailed information.

WARNING

Interlocks must only be removed by a specialist, and only if absolutely necessary for operational reasons. When removing an interlock, the specialist must take special and adequate safety measures to prevent situations, which might have fatal consequences

CAUTION

The switchgear must be operated only as prescribed in this manual. Actions, which are not prescribed, or actions prescribed in unusual circumstances, must be taken only with the approval of the responsible Eaton specialist. The latter's instructions must be followed exactly.

NOTE

Only qualified experts and qualified operating specialists may operate the equipment. No other personnel must be present in the operating area.

5.2 Setting up of Equipment

In addition to testing it will be necessary to set protective devices to the required levels, before putting the switchboard into service. This will include but not be limited to the following:

- Setting MCCB (NZM) characteristics.
- Setting of ACB (NRX/ Magnum) characteristics.
- Setting timers etc., within control schemes.

Fig. 5-1 Setting of NZM for protection of cables

Fig. 5-2 Setting of NZM for protection of motors

1. Adjustable Trip Unit

Fig. 5-3 NRX and Magnum Air Circuit Breakers

5.3 Opening and closing doors and covers

All compartment doors containing electrical equipment and cabling are provided with key-operated quick lock devices. Ensure the Rotary handle, where fitted, is turned to the off position before re-closing the door. The cableway doors are provided with quick-lock devices which are knob or key-operated.
The doors may be unlocked by turning these through 90°. Circuit-breakers in the assembly are provided with a door-catch and if necessary door interlocks. In order to be able to open a door, any interlocks which have been fitted ought to be disengaged. This can be accomplished by turning the knob or handle to the off-position. The door can now be opened.
The covers of the withdrawable compartments are to be opened like described in par. 3.1.5.

5.4 Operation

This chapter describes operating actions relating to standard equipment. The operation of optional equipment and accessories is included in the operating instructions. These can be found in the information pack, which includes this manual.

5.4.1 Air Circuit Breakers (ACB)

The ACBs can be either a Magnum or a NRX series:

Type	Rating
NRX NF	Up to 1600 A
Magnum	Up to 4000 A

ACB's are manually operated by means of front located 'on (I)' and 'off (O)' buttons. Before closing ensure that the closing springs are fully charged by operating the charging handle a number of times until no further pressure is felt. This is verified by charged window indicating 'charged' (coloured yellow when springs charged). The 'on' button can now be operated. The springs can now be re-charged ready for the next close operation. Pressing the trip button will open the ACB. Closing springs can also be motor operated by an optional motor, this is mainly used for automatic closing of the ACB when used with a closing (spring release) coil.

ACB's can be of the fixed or drawout pattern.

- a) Fixed type - as this type of ACB is not isolatable from the circuit terminals and the busbars, care must be taken to ensure that the ACB is locked off and the supply isolated before attempting any form of maintenance.
- b) Drawout type- this unit can be racked out of its chassis, after it is isolated. This affords safe maintenance of the breaker, shutters are provided to isolate the compartment from live copper work when the ACB is racked to the isolated position.

WARNING

Warning - danger of electric shock, removal of barriers within compartments may expose live parts.

5.4.2 Moulded Case Circuit Breakers

Operated using a door interlocked rotary handle, clearly indicating on (I) off (O) and tripped positions. The door cannot be opened until the MCCB is switched off. The handle can be padlocked in the off position, which also prevents the door from being opened. When the door is opened all accessible live parts are isolated to IP2X (finger protected).

WARNING

Warning - danger of electric shock, removal of internal barriers may expose live parts.

5.4.3 Incoming devices

These can be MCCB's or ACB's. The manual operation of these devices is the same as described the previous chapters but additional care should be taken as the line (cable) side of these devices, when used as incoming circuits will be live.

WARNING

Warning - danger of electric shock, ensure that the supply is isolated upstream of the switchboard before accessing incoming terminals.

5.4.4 Specific Literature and Manuals

More detailed information is available for all equipment fitted to the switchboard, if not provided with the switchboard, this can be provided on request.

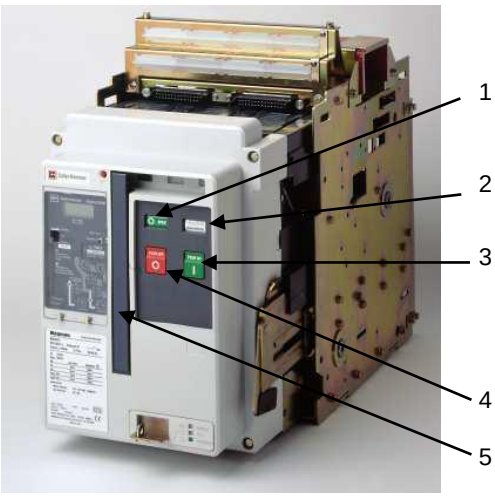

1. On-Off indicator
2. Spring charged indicator
3. On (I) button
4. Off (O) button
5. Spring charge handle

Fig. 5-4 Typical Magnum Overview

1. Mechanical test position button

Fig. 5-5 Withdrawable unit with mechanical test position button

5.5 Mechanical operation

In the next chapters the drawer positions and operation are indicated. Moving from any one position to another position always requires that the MCP or MCCB is switched off (O) and the unlocking button is fully pushed before moving the withdrawable unit.

5.5.1 Withdrawable unit positions

CONNECTED POSITION:

- Connected – ON (I)
The unit is inserted, main disconnect is closed, main and control circuit is connected.

- Connected – OFF (O)
The unit is inserted, main disconnect is open, main and control circuits are connected, padlocking is possible.

When the unit is in the "ON" position, the mechanical test position mechanism is interlocked with the operating shaft of the main disconnect device (MCP) to ensure that the compartment cannot be withdrawn.

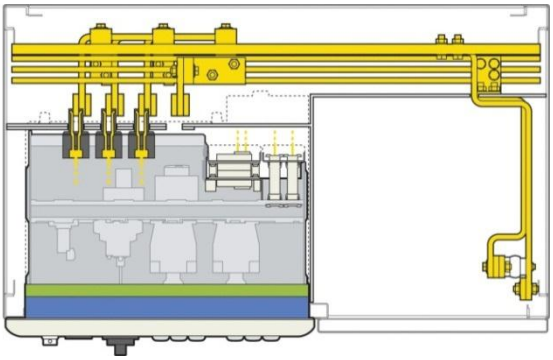

Fig. 5-6 (Top view) Withdrawing unit in Connected position - ON

TEST POSITION:

The unit is partially withdrawn and is separated 30 mm from the distribution bars, main disconnect is open, main circuit is disconnected, control circuit is connected, the test button is illuminated, padlocking is possible.

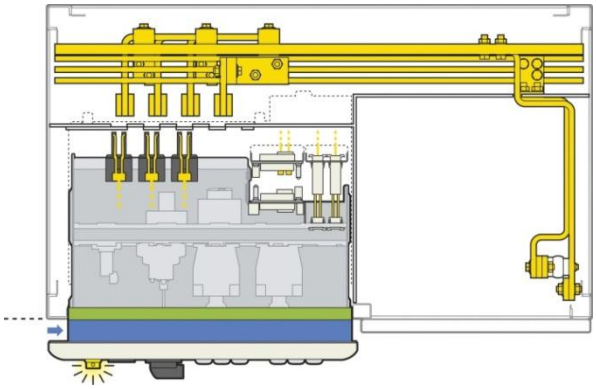

Fig. 5-7 (Top view) Withdrawing unit in Test position.
Test button is illuminated and colour blue visible.

DISCONNECTED POSITION:

The unit is partially withdrawn and is separated 45 mm from the distribution bars, main disconnect is open, main and control circuits are disconnected, padlocking is possible.

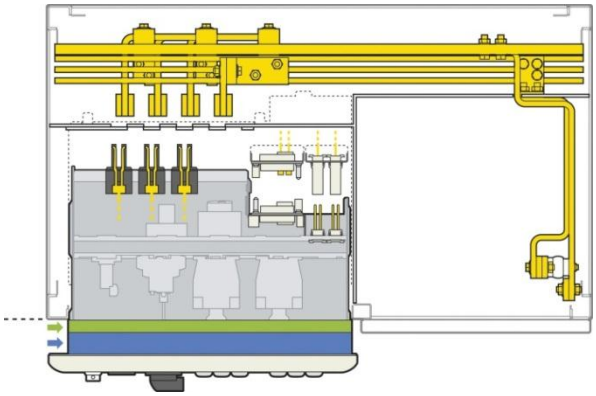

Fig. 5-8 (Top view) Withdrawing unit in Disconnected position.
Colours green and blue are visible

5.5.2 Withdrawable unit operation

Push the unlocking button before moving the withdrawable unit.

Fig. 5-9 Mechanical test position button

Move the withdrawable unit by pushing or pulling on both sides using the integrated handles.

Fig. 5-10 Moving unit in test position

To prevent the compartment to be withdrawn (by pressing the unlocking button) in ON (I) position the rotary handle and the test mechanism are interlocked.

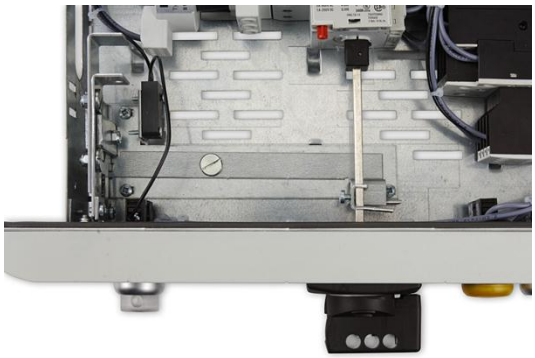

Fig. 5-11 Withdrawable unit mechanically interlocked

5.6 Decommissioning

5.6.1 Dismantling

WARNING

Prior to dismantling, ensure that the entire installation is voltage free.

WARNING

The components are not designed for field dismantling and should be returned to Eaton.

The following safety measures must be taken when dismantling the switchgear

- During dismantling use protective equipment such as safety goggles, gloves, protective footwear and dust hoods.
- Watch out for sharp edges on metal panels and other parts.
- Use suitable and safe tools.

5.6.2 Disposal

Power Xpert® CX switchgear should be disposed of in an environmentally responsible manner. Substances and materials arising from dismantling should be destroyed, re-used or disposed of in accordance with the regulations currently in force.

All materials used in the manufacture of the Power Xpert® CX can be recycled. No toxic or harmful products are generated in the normal use of the switchgear.

6 System inspection, maintenance and repair

The maintenance described in this chapter may be carried out by the user's qualified personnel, with due attention to and compliance with instructions and safety regulations.

6.1 Logbook

The user should keep a logbook with data relating to the installation and any maintenance and repair carried out. The logbook should at least include the following:

- All important incidents occurring in and with the switchgear
- All faults;
- All maintenance work carried out;
- All repairs carried out.

6.2 Inspection and maintenance, general

Power Xpert® CX switchgear and the components used in them require little maintenance. However, inspections and checks should be made at regular intervals and preventive maintenance carried out.

The first inspection is best carried out after six months of operation. A suitable inspection and maintenance schedule can be set up on the basis of this initial inspection.

If required, Eaton can, at regular intervals or when considered necessary, carry out an intensive inspection of the installation and make recommendations with regard to life extension of the equipment.
Periodic checks can be made by the user's own qualified personnel. Eaton can provide guidelines and, if necessary, training for these.

REMARK

In the event of a fault always contact Eaton.

6.3 Checking and maintenance schedule for components

For checks and maintenance on the components, reference should be made to their individual manuals.
Checking and maintenance schedule for Power Xpert® CX switchgear

- Periodic check: Annually
- Maintenance: Every 5 years.

WARNING

Inspections, checks and maintenance operations should only be carried out by authorised specialist personnel. Before inspections, checks and maintenance operations are commenced, all necessary steps must be taken to ensure safe working. This means among other things that:

- **All parts of the system must be voltage free and earthed.**
- **Protective plates must only be removed after the installation has been made completely safe.**

6.3.1 Periodic check

Carry out visual inspection checking:

- For dirt, dust and moisture;
- Rodents and other small animals;
- Instruments and relays for faults;
- For loose or discoloured wiring;
- Core end terminations/terminal strips;
- For loose plates/mounting material;
- For exceptional wear.
- In case there is much oxidation on the metal parts this must be removed (not by electrical connections). The cause must also be removed (this is very often poor air conditioning in the installation room).

If there is a lot of dust or sand in the assembly this ought to be properly vacuumed up. The cause of this accumulation of dust or sand ought to be removed.
Check door-interlocks, hinges, locks and seals (gaskets) for proper state and functioning. If necessary clean with a dry cloth.

Check all outgoing main circuit connections by tightening up the bolts to the prescribed torque rating (see next page). Random checks should be carried out on secondary connections in order to check that the wires are properly attached.

All hand-operated switches should be turned on and off five times.

Withdrawable Units

Remove the draw-out units one by one and check the contents to see whether all primary and secondary connections are secure.

Functional Check

All electrically working components (relays, ammeters, on and off switching coils, circuit-breakers, etc.) should be checked for correct functioning. After this check has taken place, depending upon circumstances and the results gained, it must be decided whether the checks, or elements of them, should take place once a year or after a number of years, up to a maximum of five years.

6.3.2 Maintenance

1. Carry out the checks described under periodic checks
2. Measure the contact resistance in the main current circuit. For resistance values, reference should be made to the test report in your documentation pack that includes this manual
3. Apply a test voltage to the primary circuit.

On completion of the maintenance operations, remove all special safety measures. Then return the installation to normal operation.

6.4 Modification

This paragraph describes the modification of the cubicle layout with outgoing feeders in the withdrawable version.

1. Take the compartment(s) out of the cubicle that need to be modified.
2. Take out the dividing plate(s) (see picture) by removing the 2 screws in the front of the panel
3. Put in the new dividing plate (with the correct contacts fixed part for the new compartment)

Fig. 6-1 Changing compartments

6.5 Fault diagnosis

If a fault is found in the system, use the troubleshooting table to look for the cause. Contact Eaton if you cannot find the cause. Every fault and all operations carried out, must be recorded in the logbook.

6.6 Torque Ratings

6.6.1 General

In the table below are the general torque ratings used for the Power Xpert® CX:

Size	Torque
M3 (x 0,5)	1.3 Nm
M3,5 (x 0,6)	1.9 Nm
M4 (x 0,7)	2.9 Nm
M4,5 (x 0,75)	4.1 Nm
M5 (x 0,8)	5.7 Nm
M6 (x 1)	9.9 Nm
M7 (x 1)	16 Nm
M8 (x 1,25)	24 Nm
M8 x 1	26 Nm
M10 (x 1,5)	48 Nm
M10 x 0,75	57 Nm
M10 x 1	54 Nm
M10 x 1,25	51 Nm
M12 (x 1,75)	85 Nm
M12 x 1	97 Nm
M12 x 1,25	93 Nm
M12 x 1,5	89 Nm

For the outgoing contacts (Harting) we recommend using the following torque information:

6.6.2 Han Modular

Type	Cable connection size	Stripping length	Torque
Han 40 A Axial	2,5 mm^2	5 (+1) mm	1.5 Nm
Han 40 A Axial	4 mm^2	5 (+1) mm	1.5 Nm
Han 40 A Axial	6 mm^2	8 (+1) mm	2 Nm
Han 40 A Axial	10 mm^2	11 (+1) mm	2 Nm
Han 100 A Axial	10 mm^2	13 mm	6 Nm
Han 100 A Axial	16 mm^2	13 mm	6 Nm
Han 100 A Axial	25 mm^2	13 mm	7 Nm
Han 100 A Axial	35 mm^2	13 mm	8 Nm
Han 200 A Axial	25 mm^2	16 mm	8 Nm
Han 200 A Axial	35 mm^2	16 mm	8 Nm
Han 200 A Axial	50 mm^2	16 mm	9 Nm
Han 200 A Axial	70 mm^2	16 mm	10 Nm

6.6.3 Han HC Modular

Type	Cable connection size	Stripping length (mm)	Torque	Bolt Size
Han 350 A Screw	35 mm^2	not applicable (only for Axial)	14 Nm	M10
Han 350 A Screw	50 mm^2	not applicable (only for Axial)	14 Nm	M10
Han 350 A Screw	70 mm^2	not applicable (only for Axial)	14 Nm	M10
Han 350 A Screw	95 mm^2	not applicable (only for Axial)	14 Nm	M10
Han 350 A Screw	120 mm^2	not applicable (only for Axial)	14 Nm	M10
Han 650 A Screw	70 mm^2	not applicable (only for Axial)	16 - 18 Nm	M12
Han 650 A Screw	95 mm^2	not applicable (only for Axial)	16 - 18 Nm	M12
Han 650 A Screw	120 mm^2	not applicable (only for Axial)	16 - 18 Nm	M12
Han 650 A Screw	150 mm^2	not applicable (only for Axial)	16 - 18 Nm	M12
Han 650 A Screw	185 mm^2	not applicable (only for Axial)	16 - 18 Nm	M12

6.7 Service-department

Our service-department will gladly offer advice regarding the checking of your switchboard in the manner as described above. Our service-department is equipped to carry out extremely intensive checking and maintenance. Amongst other things this includes measurement of insulation resistance, applying test-voltages, the flow through of relays, checking and testing all devices, troubleshooting and replacing faulty components.

7 Data Outgoing Units

Data Outgoing Units 400/415 for Direct-on-Line (DOL) 50kA

Power Rating	Ie	operating current	Drawer Height	Ir	Irm	Motor Circuit Protection	First contactor			Auxiliary protection	Internal power wiring before MCP	Internal power wiring after MCP	connection range
	@400V/ 415V	@400V/ 415V		overload	short circuit	MCP Type	Contactor Type			MCB			
[kW]	[A]	[A]	[mm]			Q1	K1	no	nc		[mm²]	[mm²]	[mm²]
0.06	0.2	0.2	75	0.16-0.25	3.5	PKZM0-0.25	DILM7-10	2	3	PLSM-C2	2.5	2.5	1x2.5-35
0.09	0.3	0.3	75	0.25-0.4	5.6	PKZM0-0.4	DILM7-10	2	3	PLSM-C2	2.5	2.5	1x2.5-35
0.12	0.44	0.44	75	0.4-0.63	8.82	PKZM0-0.63	DILM7-10	2	3	PLSM-C2	2.5	2.5	1x2.5-35
0.18	0.6	0.6	75	0.4-0.63	8.82	PKZM0-0.63	DILM7-10	2	3	PLSM-C2	2.5	2.5	1x2.5-35
0.25	0.85	0.85	75	0.63-1	14	PKZM0-1	DILM7-10	2	3	PLSM-C2	2.5	2.5	1x2.5-35
0.37	1.2	1.2	75	1.00-1.6	22.4	PKZM0-1.6	DILM7-10	2	3	PLSM-C2	2.5	2.5	1x2.5-35
0.55	1.6	1.6	75	1.00-1.6	22.4	PKZM0-1.6	DILM7-10	2	3	PLSM-C2	2.5	2.5	1x2.5-35
0.75	1.9	1.9	75	1.6-2.5	35	PKZM0-2.5	DILM7-10	2	3	PLSM-C2	2.5	2.5	1x2.5-35
1.1	2.5	2.5	75	2.5-4	56	PKZM0-4	DILM7-10	2	3	PLSM-C2	2.5	2.5	1x2.5-35
1.5	3.5	3.5	75	2.5-4	56	PKZM0-4	DILM7-10	2	3	PLSM-C2	2.5	2.5	1x2.5-35
2.2	5.1	5.1	75	4-6.3	88.2	PKZM0-6.3	DILM7-10	2	3	PLSM-C2	2.5	2.5	1x2.5-35
3	6.6	6.6	75	6.3-10	140	PKZM0-10	DILM17-10	2	3	PLSM-C2	2.5	2.5	1x2.5-35
4	8.2	8.2	75	6.3-10	140	PKZM0-10	DILM17-10	2	3	PLSM-C2	2.5	2.5	1x2.5-35
5.5	11.2	11.2	75	8-12	168	PKZM0-12	DILM17-10	2	3	PLSM-C2	2.5	2.5	1x2.5-35
7.5	14.5	14.5	75	10-16	224	PKZM0-16	DILM17-10	2	3	PLSM-C2	6	6	1x2.5-35
11	21.5	21.5	75	20-25	350	PKZM0-25	DILM25-10	2	3	PLSM-C2	10	10	1x2.5-35
15	29	29	75	25-32	448	PKZM0-32	DILM32-10	2	3	PLSM-C2	10	10	1x2.5-35
18.5	36	36	150	32-40	560	PKZM4-40	DILM40-22	2	2	PLSM-C2	25	25	1x16-35
22	42	42	150	40-50	700	PKZM4-50	DILM50-22	2	2	PLSM-C2	25	25	1x16-35
30	57	57	150	50-63	504-882	NZMN1-M63	DILM80-22	2	2	PLSM-C2	50	50	1x16-35
37	69	69	150	63-80	640-1120	NZMN1-M80	DILM80-22	2	2	PLSM-C2	50	50	1x16-35
45	81	81	150	80-100	800-1400	NZMH2-M100	DILM95-22	2	2	PLSM-C2	50	50	1x16-95
55	99	99	225	100-125	1000-1750	NZMN2-M125	DILM115-22	2	2	PLSM-C2	70	70	1x16-95
75	136	136	225	125-160	1280-2240	NZMN2-M160	DILM150-22	2	2	PLSM-C2	70	70	2x16-70
90	162	162	300	160-200	1600-2800	NZMN2-M200	DILM185A/22	2	2	PLSM-C2	95	95	2x16-70
110	198	198	450	160-200	1600-2800	NZMN2-M200	DILM225A/22	2	2	PLSM-C2	2 x 70	20x5 (99.1 sq)	2x16-70
132	238	238	450	175-350	350-4900	NZMN3-ME350	DILM250-S/22	2	2	PLSM-C2	2 x 95	30x5 (149 sq)	2x16-70
160	280	275	450	175-350	350-4900	NZMN3-ME350	DILM300A-S/22	2	2	PLSM-C2	2 x 95	30x5 (149 sq)	2x25-120

Data Outgoing Units 400/415 for Direct-on-Line (DOL) 80kA

Power Rating	Ie	operating current	Drawer Height	Ir	Irm	Motor Circuit Protection	First contactor			Auxiliary protection	Internal power wiring before MCP	Internal power wiring after MCP	connection range
	@400V/ 415V	@400V/ 415V		overload	short circuit	MCP Type	Contactor Type			MCB			
[kW]	[A]	[A]	[mm]			Q1	K1	no	nc		[mm²]	[mm²]	[mm²]
0.06	0.2	0.2	75	0.16-0.25	3.5	PKZM0-0.25	DILM7-10	2	3	PLSM-C2	2.5	2.5	1x2.5-35
0.09	0.3	0.3	75	0.25-0.4	5.6	PKZM0-0.4	DILM7-10	2	3	PLSM-C2	2.5	2.5	1x2.5-35
0.12	0.44	0.44	75	0.4-0.63	8.82	PKZM0-0.63	DILM7-10	2	3	PLSM-C2	2.5	2.5	1x2.5-35
0.18	0.6	0.6	75	0.4-0.63	8.82	PKZM0-0.63	DILM7-10	2	3	PLSM-C2	2.5	2.5	1x2.5-35
0.25	0.85	0.85	75	0.63-1	14	PKZM0-1	DILM7-10	2	3	PLSM-C2	2.5	2.5	1x2.5-35
0.37	1.2	1.2	75	1.00-1.6	22.4	PKZM0-1.6	DILM7-10	2	3	PLSM-C2	2.5	2.5	1x2.5-35
0.55	1.6	1.6	75	1.00-1.6	22.4	PKZM0-1.6	DILM7-10	2	3	PLSM-C2	2.5	2.5	1x2.5-35
0.75	1.9	1.9	75	1.6-2.5	35	PKZM0-2.5	DILM7-10	2	3	PLSM-C2	2.5	2.5	1x2.5-35
1.1	2.5	2.5	75	2.5-4	56	PKZM0-4	DILM7-10	2	3	PLSM-C2	2.5	2.5	1x2.5-35
1.5	3.5	3.5	75	2.5-4	56	PKZM0-4	DILM7-10	2	3	PLSM-C2	2.5	2.5	1x2.5-35
2.2	5.1	5.1	75	4-6.3	88.2	PKZM0-6.3	DILM7-10	2	3	PLSM-C2	2.5	2.5	1x2.5-35
3	6.6	6.6	75	3.0-12	168	PKE12/XTU-12	DILM17-10	2	3	PLSM-C2	2.5	2.5	1x2.5-35
4	8.2	8.2	75	3.0-12	168	PKE12/XTU-12	DILM17-10	2	3	PLSM-C2	2.5	2.5	1x2.5-35
5.5	11.2	11.2	75	3.0-12	168	PKE12/XTU-12	DILM17-10	2	3	PLSM-C2	2.5	2.5	1x2.5-35
7.5	14.5	14.5	75	8-32	448	PKE32/XTU-32	DILM17-10	2	3	PLSM-C2	2.5	2.5	1x2.5-35
11	21.5	21.5	75	8-32	448	PKE32/XTU-32	DILM25-10	2	3	PLSM-C2	10	10	1x2.5-35
15	29	29	75	8-32	448	PKE32/XTU-32	DILM32-10	2	3	PLSM-C2	10	10	1x2.5-35
18.5	36	36	150	32-40	320-560	NZMH2-M40	DILM80-22	2	2	PLSM-C2	16	16	1x16-35
22	42	42	150	40-50	400-700	NZMH2-M50	DILM80-22	2	2	PLSM-C2	25	25	1x16-35
30	57	57	150	50-63	504-882	NZMH2-M63	DILM80-22	2	2	PLSM-C2	25	25	1x16-35
37	69	69	150	63-80	640-1120	NZMH2-M80	DILM80-22	2	2	PLSM-C2	50	50	1x16-35
45	81	81	150	80-100	800-1400	NZMH2-M100	DILM95-22	2	2	PLSM-C2	50	50	1x16-95
55	99	99	225	100-125	1000-1750	NZMH2-M125	DILM115-22	2	2	PLSM-C2	70	70	1x16-95
75	136	136	225	125-160	1280-2240	NZMH2-M160	DILM150-22	2	2	PLSM-C2	70	70	2x16-70
90	162	162	300	160-200	1600-2800	NZMH2-M200	DILM185A/22	2	2	PLSM-C2	95	95	2x16-70
110	198	198	450	160-200	1600-2800	NZMH2-M200	DILM225A/22	2	2	PLSM-C2	2 x 70	20x5 (99.1 sq)	2x16-70
132	238	238	450	175-350	350-4900	NZMH3-ME350	DILM250-S/22	2	2	PLSM-C2	2 x 95	30x5 (149 sq)	2x16-70
160	280	275	450	175-350	350-4900	NZMH3-ME350	DILM300A-S/22	2	2	PLSM-C2	2 x 95	30x5 (149 sq)	2x25-120

Data Outgoing Units 400/415 for Forward-Reverse (FR) 50kA

Power Rating	Ie	operating current	Drawer Height	Ir	Irm	Motor Circuit Protection	First contactor			First contactor			Auxiliary protection	Internal power wiring before MCP	Internal power wiring after MCP	connection range
	@400V/ 415V	@400V/ 415V		overload	short circuit	MCP Type	Contactor Type			Contactor Type			MCB			
[kW]	[A]	[A]	[mm]			Q1	K1	no	nc	K2	no	nc		[mm²]	[mm²]	[mm²]
0.06	0.2	0.2	75	0.16-0.25	3.5	PKZM0-0.25	DILM7-10	2	3	DILM7-10	2	3	PLSM-C2	2.5	2.5	1x2.5-35
0.09	0.3	0.3	75	0.25-0.4	5.6	PKZM0-0.4	DILM7-10	2	3	DILM7-10	2	3	PLSM-C2	2.5	2.5	1x2.5-35
0.12	0.44	0.44	75	0.4-0.63	8.82	PKZM0-0.63	DILM7-10	2	3	DILM7-10	2	3	PLSM-C2	2.5	2.5	1x2.5-35
0.18	0.6	0.6	75	0.4-0.63	8.82	PKZM0-0.63	DILM7-10	2	3	DILM7-10	2	3	PLSM-C2	2.5	2.5	1x2.5-35
0.25	0.85	0.85	75	0.63-1	14	PKZM0-1	DILM7-10	2	3	DILM7-10	2	3	PLSM-C2	2.5	2.5	1x2.5-35
0.37	1.2	1.2	75	1.00-1.6	22.4	PKZM0-1.6	DILM7-10	2	3	DILM7-10	2	3	PLSM-C2	2.5	2.5	1x2.5-35
0.55	1.6	1.6	75	1.00-1.6	22.4	PKZM0-1.6	DILM7-10	2	3	DILM7-10	2	3	PLSM-C2	2.5	2.5	1x2.5-35
0.75	1.9	1.9	75	1.6-2.5	35	PKZM0-2.5	DILM7-10	2	3	DILM7-10	2	3	PLSM-C2	2.5	2.5	1x2.5-35
1.1	2.5	2.5	75	2.5-4	56	PKZM0-4	DILM7-10	2	3	DILM7-10	2	3	PLSM-C2	2.5	2.5	1x2.5-35
1.5	3.5	3.5	75	2.5-4	56	PKZM0-4	DILM7-10	2	3	DILM7-10	2	3	PLSM-C2	2.5	2.5	1x2.5-35
2.2	5.1	5.1	75	4-6.3	88.2	PKZM0-6.3	DILM7-10	2	3	DILM7-10	2	3	PLSM-C2	2.5	2.5	1x2.5-35
3	6.6	6.6	75	6.3-10	140	PKZM0-10	DILM17-10	2	3	DILM17-10	2	3	PLSM-C2	2.5	2.5	1x2.5-35
4	8.2	8.2	75	6.3-10	140	PKZM0-10	DILM17-10	2	3	DILM17-10	2	3	PLSM-C2	2.5	2.5	1x2.5-35
5.5	11.2	11.2	75	8-12	168	PKZM0-12	DILM17-10	2	3	DILM17-10	2	3	PLSM-C2	2.5	2.5	1x2.5-35
7.5	14.5	14.5	75	10-16	224	PKZM0-16	DILM17-10	2	3	DILM17-10	2	3	PLSM-C2	6	6	1x2.5-35
11	21.5	21.5	75	20-25	350	PKZM0-25	DILM25-10	2	3	DILM25-10	2	3	PLSM-C2	10	10	1x2.5-35
15	29	29	75	25-32	448	PKZM0-32	DILM32-10	2	3	DILM32-10	2	3	PLSM-C2	10	10	1x2.5-35
18.5	36	36	150	32-40	560	PKZM4-40	DILM40-22	2	2	DILM40-22	3	2	PLSM-C2	25	25	1x16-35
22	42	42	150	40-50	700	PKZM4-50	DILM50-22	2	2	DILM50-22	3	2	PLSM-C2	25	25	1x16-35
30	57	57	225	50-63	504-882	NZMN1-M63	DILM80-22	2	2	DILM80-22	3	2	PLSM-C2	50	50	1x16-35
37	69	69	225	63-80	640-1120	NZMN1-M80	DILM80-22	2	2	DILM80-22	3	2	PLSM-C2	50	50	1x16-35
45	81	81	225	80-100	800-1400	NZMH2-M100	DILM95-22	2	2	DILM95-22	3	2	PLSM-C2	50	50	1x16-95
55	99	99	225	100-125	1000-1750	NZMH2-M125	DILM115-22	2	2	DILM115-22	3	2	PLSM-C2	70	70	1x16-95
75	136	136	225	125-160	1280-2240	NZMN2-M160	DILM150-22	2	2	DILM150-22	3	2	PLSM-C2	70	70	2x16-70
90	162	162	450	160-200	1600-2800	NZMN2-M200	DILM185A/22	2	2	DILM185A/22	2	2	PLSM-C2	95	20x5 (99.1 sq)	2x16-70
110	198	198	450	160-200	1600-2800	NZMN2-M200	DILM225A/22	2	2	DILM225A/22	2	2	PLSM-C2	2 x 70	20x5 (99.1 sq)	2x16-70

Data Outgoing Units 400/415 for Forward-Reverse (FR) 80kA

Power Rating	Ie	operating current	Drawer Height	Ir	Irm	Motor Circuit Protection	First contactor			First contactor			Auxiliary protection	Internal power wiring before MCP	Internal power wiring after MCP	connection range
	@400V/ 415V	@400V/ 415V		overload	short circuit	MCP Type	Contactor Type			Contactor Type			MCB			
[kW]	[A]	[A]	[mm]			Q1	K1	no	nc	K2	no	nc		[mm²]	[mm²]	[mm²]
0.06	0.2	0.2	75	0.16-0.25	3.5	PKZM0-0.25	DILM7-10	2	3	DILM7-10	2	3	PLSM-C2	2.5	2.5	1x2.5-35
0.09	0.3	0.3	75	0.25-0.4	5.6	PKZM0-0.4	DILM7-10	2	3	DILM7-10	2	3	PLSM-C2	2.5	2.5	1x2.5-35
0.12	0.44	0.44	75	0.4-0.63	8.82	PKZM0-0.63	DILM7-10	2	3	DILM7-10	2	3	PLSM-C2	2.5	2.5	1x2.5-35
0.18	0.6	0.6	75	0.4-0.63	8.82	PKZM0-0.63	DILM7-10	2	3	DILM7-10	2	3	PLSM-C2	2.5	2.5	1x2.5-35
0.25	0.85	0.85	75	0.63-1	14	PKZM0-1	DILM7-10	2	3	DILM7-10	2	3	PLSM-C2	2.5	2.5	1x2.5-35
0.37	1.2	1.2	75	1.00-1.6	22.4	PKZM0-1.6	DILM7-10	2	3	DILM7-10	2	3	PLSM-C2	2.5	2.5	1x2.5-35
0.55	1.6	1.6	75	1.00-1.6	22.4	PKZM0-1.6	DILM7-10	2	3	DILM7-10	2	3	PLSM-C2	2.5	2.5	1x2.5-35
0.75	1.9	1.9	75	1.6-2.5	35	PKZM0-2.5	DILM7-10	2	3	DILM7-10	2	3	PLSM-C2	2.5	2.5	1x2.5-35
1.1	2.5	2.5	75	2.5-4	56	PKZM0-4	DILM7-10	2	3	DILM7-10	2	3	PLSM-C2	2.5	2.5	1x2.5-35
1.5	3.5	3.5	75	2.5-4	56	PKZM0-4	DILM7-10	2	3	DILM7-10	2	3	PLSM-C2	2.5	2.5	1x2.5-35
2.2	5.1	5.1	75	4-6.3	88.2	PKZM0-6.3	DILM7-10	2	3	DILM7-10	2	3	PLSM-C2	2.5	2.5	1x2.5-35
3	6.6	6.6	75	3.0-12	168	PKE12/XTU-12	DILM17-10	2	3	DILM17-10	2	3	PLSM-C2	2.5	2.5	1x2.5-35
4	8.2	8.2	75	3.0-12	168	PKE12/XTU-12	DILM17-10	2	3	DILM17-10	2	3	PLSM-C2	2.5	2.5	1x2.5-35
5.5	11.2	11.2	75	3.0-12	168	PKE12/XTU-12	DILM17-10	2	3	DILM17-10	2	3	PLSM-C2	2.5	2.5	1x2.5-35
7.5	14.5	14.5	75	8-32	448	PKE32/XTU-32	DILM17-10	2	3	DILM17-10	2	3	PLSM-C2	2.5	2.5	1x2.5-35
11	21.5	21.5	75	8-32	448	PKE32/XTU-32	DILM25-10	2	3	DILM25-10	2	3	PLSM-C2	10	10	1x2.5-35
15	29	29	75	8-32	448	PKE32/XTU-32	DILM32-10	2	3	DILM32-10	2	3	PLSM-C2	10	10	1x2.5-35
18.5	36	36	225	32-40	320-560	NZMH2-M40	DILM80-22	2	2	DILM80-22	3	2	PLSM-C2	16	16	1x16-35
22	42	42	225	40-50	400-700	NZMH2-M50	DILM80-22	2	2	DILM80-22	3	2	PLSM-C2	25	25	1x16-35
30	57	57	225	50-63	504-882	NZMH2-M63	DILM80-22	2	2	DILM80-22	3	2	PLSM-C2	25	25	1x16-35
37	69	69	225	63-80	640-1120	NZMH2-M80	DILM80-22	2	2	DILM80-22	3	2	PLSM-C2	50	50	1x16-35
45	81	81	225	80-100	800-1400	NZMH2-M100	DILM95-22	2	2	DILM95-22	3	2	PLSM-C2	50	50	1x16-95
55	99	99	225	100-125	1000-1750	NZMH2-M125	DILM115-22	2	2	DILM115-22	3	2	PLSM-C2	70	70	1x16-95
75	136	136	225	125-160	1280-2240	NZMH2-M160	DILM150-22	2	2	DILM150-22	3	2	PLSM-C2	70	70	2x16-70
90	162	162	450	160-200	1600-2800	NZMH2-M200	DILM185A/22	2	2	DILM185A/22	3	2	PLSM-C2	95	20x5 (99.1 sq)	2x16-70
110	198	198	450	160-200	1600-2800	NZMH2-M200	DILM225A/22	2	2	DILM225A/22	3	2	PLSM-C2	2 x 70	20x5 (99.1 sq)	2x16-70

Data Outgoing Units 400/415 for Star Delta (SD) 50kA

Power Rating	Ie	operating current	Drawer Height	Ir	Irm	Motor Circuit Protection	First contactor			First contactor			First contactor			Auxiliary protection	Internal power wiring before MCP	Internal power wiring after MCP	connection range
	@400V/ 415V	@400V/ 415V		overload	short circuit	MCP Type	Contactor Type			Contactor Type			Contactor Type			MCB			
[kW]	[A]	[A]	[mm]			Q1	K1	no	nc	K2	no	nc	K3	no	nc		[mm²]	[mm²]	[mm²]
5.5	11.2	11.2	150	8-12	168	PKZM0-12	DILM17-10	2	3	DILM17-10	2	3	DILM17-10	2	3	PLSM-C2	2.5	2.5	1x2.5-35
7.5	14.5	14.5	150	10-16	224	PKZM0-16	DILM17-10	2	3	DILM17-10	2	3	DILM17-10	2	3	PLSM-C2	6	6	1x2.5-35
11	21.5	21.5	150	20-25	350	PKZM0-25	DILM25-10	2	3	DILM25-10	2	3	DILM17-10	2	3	PLSM-C2	10	6	1x2.5-35
15	29	29	150	25-32	448	PKZM0-32	DILM32-10	2	3	DILM32-10	2	3	DILM17-10	2	3	PLSM-C2	10	6	1x2.5-35
18.5	36	36	225	32-40	560	PKZM4-40	DILM40-22	3	2	DILM40-22	2	2	DILM40-22	2	2	PLSM-C2	25	16	1x16-35
22	42	42	225	40-50	700	PKZM4-50	DILM40-22	3	2	DILM40-22	2	2	DILM40-22	2	2	PLSM-C2	25	16	1x16-35
30	57	57	300	50-63	504-882	NZMN1-M63	DILM80-22	3	2	DILM80-22	2	2	DILM50-22	2	2	PLSM-C2	50	25	1x16-35
37	69	69	300	63-80	640-1120	NZMN1-M80	DILM80-22	3	2	DILM80-22	2	2	DILM50-22	2	2	PLSM-C2	50	50	1x16-35
45	81	81	300	80-100	800-1400	NZMH2-M100	DILM80-22	3	2	DILM80-22	2	2	DILM50-22	2	2	PLSM-C2	50	50	1x16-95
55	99	99	300	100-125	1000-1750	NZMN2-M125	DILM80-22	3	2	DILM80-22	2	2	DILM50-22	2	2	PLSM-C2	70	50	1x16-95
75	136	136	300	125-160	1280-2240	NZMN2-M160	DILM80-22	3	2	DILM80-22	2	2	DILM50-22	2	2	PLSM-C2	70	50	2x16-70

Data Outgoing Units 400/415 for Star Delta (SD) 80kA

Power Rating	Ie	operating current	Drawer Height	Ir	Irm	Motor Circuit Protection	First contactor			First contactor			First contactor			Auxiliary protection	Internal power wiring before MCP	Internal power wiring after MCP	connection range
	@400V/ 415V	@400V/ 415V		overload	short circuit	MCP Type	Contactor Type			Contactor Type			Contactor Type			MCB			
[kW]	[A]	[A]	[mm]			Q1	K1	no	nc	K2	no	nc	K3	no	nc		[mm²]	[mm²]	[mm²]
7.5	14.5	14.5	300	16-20	350	NZMH2-M20	DILM80-22	2	2	DILM80-22	2	2	DILM50-22	2	2	PLSM-C2	10	10	1x2.5-35
11	21.5	21.5	300	20-25	350	NZMH2-M25	DILM80-22	2	2	DILM80-22	2	2	DILM50-22	2	2	PLSM-C2	10	10	1x2.5-35
15	29	29	300	25-32	320-448	NZMH2-M32	DILM80-22	2	2	DILM80-22	2	2	DILM50-22	2	2	PLSM-C2	10	10	1x2.5-35
18.5	36	36	300	32-40	320-560	NZMH2-M40	DILM80-22	2	2	DILM80-22	2	2	DILM50-22	2	2	PLSM-C2	16	10	1x16-35
22	42	42	300	40-50	400-700	NZMH2-M50	DILM80-22	2	2	DILM80-22	2	2	DILM50-22	2	2	PLSM-C2	25	16	1x16-35
30	57	57	300	50-63	504-882	NZMH2-M63	DILM80-22	2	2	DILM80-22	2	2	DILM50-22	2	2	PLSM-C2	25	16	1x16-35
37	69	69	300	63-80	640-1120	NZMH2-M80	DILM80-22	2	2	DILM80-22	2	2	DILM50-22	2	2	PLSM-C2	50	25	1x16-35
45	81	81	300	80-100	800-1400	NZMH2-M100	DILM80-22	2	2	DILM80-22	2	2	DILM50-22	2	2	PLSM-C2	50	50	1x16-95
55	99	99	300	100-125	1000-1750	NZMH2-M125	DILM80-22	2	2	DILM80-22	2	2	DILM50-22	2	2	PLSM-C2	70	50	1x16-95
75	136	136	300	125-160	1280-2240	NZMH2-M160	DILM80-22	2	2	DILM80-22	2	2	DILM50-22	2	2	PLSM-C2	70	50	2x16-70

8 Accessories

8.1 List of available accessories and spare parts

The following accessories can also be supplied for Power Xpert® CX switchgear.

8.1.1 Structures

Rear Wall	Item no.
600 mm width IP31	284361
800 mm width IP31	284362
1000 mm width IP31	284363
1200 mm width IP31	284364
600 mm width IP55	284356
800 mm width IP55	284357
1000 mm width IP55	284358
1200 mm width IP55	284359
Side Wall	**Art. Nr**
600 mm depth	283857
800 mm depth	283858
Cableway door	**Art. Nr**
400 mm width IP31	151670
400 mm width IP55	284183
600 mm width IP31	151671
600 mm width IP55	284185
600 mm high door (XP column)	**Art. Nr**
600 mm width IP31	284206
800 mm width IP31	284207
1000 mm width IP31	285507
600 mm width IP55	284195
800 mm width IP55	284196
1000 mm width IP55	285506
Raingutter	**Art. Nr**
1000 mm width	155542
1200 mm width	155543
Main Power terminal (cable way) WAGO	**Art. Nr**
Main Power WAGO terminal (cable way)	6068310
Auxiliary terminal (cable way) WAGO	**Art. Nr**
Auxiliary terminal (minimum qty = 40)	6067927
Shutter	**Art. Nr**
MCC Shutter accessory (minimum qty = 25)	151217
Lifting Eyes	**Art. Nr**
Lifting Eyes (set of 4)	283855

8.1.2 Withdrawable Units

Main Incoming Contacts EATON	Art. Nr
100 A 3P	151354
315 A 3P	151355
630 A 3P	151356
100 A 4P	151357
315 A 4P	151358
630 A 4P	151359
Main Outgoing Contacts HARTING	**Art. Nr**
Up to 40 A 3P (cable 2.5 - 8)	152649
Up to 40 A 3P (cable 6 - 10)	152650
Up to 100 A 3P (cable 10-25)	152651
Up to 100 A 3P (cable 16-35)	152652
Up to 200 A 3P (cable 25-40)	152653
Up to 200 A 3P (cable 40-70)	152654
Up to 200 A 4P (cable 25-40)	152655
Up to 200 A 4P (cable 40-70)	152656
Auxiliary contacts XILCO	**Art. Nr**
Auxiliary contacts	155540
Stopper for auxiliary contact	155541
Mechanical Interlock	**Art. Nr**
75 mm	155247
150 mm with PKZ/PKE	155248
150 mm – 300 mm with NZM	155249
450 mm	155260
Rotary Handle	**Art. Nr**
PKZ0/PKZ4	164297
PKE	164299
NZM1	271504
NZM2	279393
NZM3	279394

9 Glossary

9.1 Safety and qualification of personnel

European standard applicable

Standard applicable: EN 50110-1, chapter 4 ‘Basic principles’. This paragraph sets out the main requirements for safe operation as regards personnel.

Supplier:

Eaton. or its representative.

User:

The person or body responsible for operation and maintenance of the switchgear

Competence

The following requirements apply to operating personnel:
Operating personnel shall be ‘competent’.
A COMPETENT PERSON has relevant training and experience so that he or she is capable of preventing dangers which may be caused by electricity, for instance during switching operations.
Operating personnel must hold a written certificate of authorisation to perform switching operations signed by the management of the (power) company involved.

Responsibility

It must be clear who is responsible for operations.
All operations come within the area of responsibility of the WORK OPERATIONS MANAGER (this person must be designated in accordance with EN 50110-1 as the person responsible for *control* of operations).
An INSTALLATION MANAGER must be appointed (in accordance with EN 50110-1 the INSTALLATION MANAGER is directly responsible for operation of the installation). If two or more installations are in close proximity to each other, it is essential that appropriate arrangements are made between the INSTALLATION MANAGERS.
The responsibility which persons have for the safety of those involved in the operations, and of those who (may) have to deal with the consequences of the operations, must agree with national legislation.
Before operations are begun, while they are being carried out and prior to commissioning of the installation, the WORK OPERATIONS MANAGER must ensure that all requirements, rules and instructions are complied with.

Communication

Before starting operations, the INSTALLATION MANAGER must be informed of the intended operations. See EN 50110-1 § 4.4 for additional requirements.

Instruction

All personnel involved in operations carried out on, with or near electrical installations must have been instructed (using these operating instructions) concerning the safety requirements, safety rules and operating instructions applicable to operating the installation.

Clothing

Personnel must wear suitable clothing that fits the body closely.

Local rules and regulations

Of course, local rules and regulations (including operating instructions) must be followed.

9.2 Abnormal operating conditions

Rated voltage, current, power

The voltage, current, and power upon which the design of the switchgear is based.

Short-circuit:

An unintentional connection between two or more electrical conductors, or between a conductor and earth, in which extreme heat may be generated which may damage the installation and its surroundings.

Short-circuit current:

An electrical current which is higher, as a result of a short-circuit, than the nominal current.

Arc:

An electrical discharge, through the insulation, which produces a short-circuit. In general, and in particular in air-insulated installations, arcing may occur unexpectedly and be of an explosive nature.

9.3 Equipment and the area around it

Electrical installation:

An assembly of electrical leads and the appliances to which the leads are connected.

Switching and distribution unit, switchgear

A unit to protect or switch on or off, in one place, two or more parts of an electrical installation.

Switch room:

The area in which the switchgear is set up.

Working area:

A clearly indicated part of the operating area in which work on the installation can be carried out safely.

Switch:

An apparatus designed to switch electrical currents on and off.

Load-break switch:

A switch capable of safely switching on a short-circuit current and switching off a nominal current.

Circuit-breaker:

A switch capable of operating safely under abnormal circumstances, and in particular capable of switching a short-circuit current on and off safely.

Fuse:

An electrical appliance that is connected in series with a circuit, and can interrupt the circuit safely by the melting of an internal conductor immediately the current in the circuit exceeds a specified value for a specified time.

Cartridge fuse:

The replaceable part of a fuse that contains the (melting) conductor.

Busbar insulating bushings:

Insulators for running busbars through the sidewalls of switch panels so as to be proof against arcing.

Tapered bushings:

Insulators for running insertion contacts through the partition walls between the switch compartment and the busbar and cable compartments, so as to be proof against arcing

Withdrawable unit:

A unit on a withdrawable carriage designed to be inserted into the switchgear compartment and can be a circuit breaker, contactor, metering truck, disconnector truck, VT truck for example.

10 Appendix

10.1 General

This user manual is part of the information pack compiled whenever equipment is supplied and consists of the following parts

Information on the folder(s):

- Project title
- Name of the installation
- Type of installation (key data such as voltage, current etc.)
- Client order number
- Eaton name and order number
- Eaton contact address for fault reporting: name, telephone number, fax number
- Date of issue
- Table of contents

Diagram pack, including:

- Single line diagram
- Floor plan drawings with dimensions, measurements and weights

Eaton's Electrical Sector is a global leader in power distribution, power quality, control and automation, and monitoring products. When combined with Eaton's full-scale engineering services, these products provide customer-driven PowerChain™ solutions to serve the power system needs of the data center, industrial, institutional, public sector, utility, commercial, residential, IT, mission critical, alternative energy and OEM markets worldwide.

PowerChain solutions help enterprises achieve sustainable and competitive advantages through proactive management of the power system as a strategic, integrated asset throughout its life cycle, resulting in enhanced safety, greater reliability and energy efficiency. For more information, visit www.eaton.com/electrical.

Powering Business Worldwide

Eaton Industries (The Netherlands) B.V.
P.O. Box 23
7550 AA Hengelo
The Netherlands

Tel.: +31 74 246 91 11
Fax: +31 74 246 44 44
info.electric@eaton.com
www.eatonelectrical.com